ARCHITECTURAL LIGHTING

Lighting Petridis

COMLED

ARCHITECTURAL LIGHTING

Factory: Agios Athanasios - Thessaloniki
570 03 Agios Athanasios - Thessaloniki, T. +30 2310 701 081, F. +30 2310 702 370
e-mail: info@petridis-lighting.gr, www.petridis-lighting.gr

Adrianoupoleos Showroom
6, Adrianoupoleos str. - 551 33 Kalamaria,
T. +30 2310 408 700, F. +30 2310 407 037 -
+30 2310 407 016 e-mail: thessaloniki@petridis-lighting.gr

Athens Showroom
70 Ethnikis Antistaseos str., 152 31 Halandri,
T. +30 210 67 54 862-9, F. +30 210 67 15 791
e-mail: athens@petridis-lighting.gr

Patra Showroom
138, New Highway Patra - Athens, 264 43 Patra,
T. +30 2610 318 268, F. +30 2610 338 056
e-mail: patra@petridis-lighting.gr

PRODUCTION

The company owns the most updated technologically production equipment and controls every stage of its production and the quality of the products by the application of certified production systems.

LABORATORIES TESTING

Petridis S.A. guarantees photometric data sheets, according to the latest European and International recommentantions and standards, thanks to the support of our photometric laboratory.
The photometric tests are performed by procedures in accordance with all European standards.
Petridis S.A., thanks to its special design computer software, is able to achieve maximum efficiency and suitable light distribution of any louvre or reflector.

PRODUCT DEVELOPMENT

For **Petridis S.A. "Good Product"** means:
/ Constant High Quality / High Efficiency / Attention to Detail / Value for Money

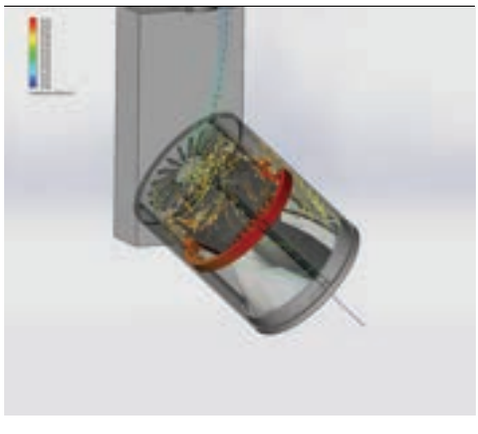

CERTIFICATES

Quality assurance

Reliable, functional and efficient products, new ideas, the continued development of design and the 55 years of experience in the lighting industry are factors of an equation that make a great pragmatism in technology resulting in high quality products.

Quality and service

An inextricable combination of a powerful advantage that gives us the strength to continue creatively in PETRIDIS Lighting, benefiting from a team of specialists, committed to satisfying customer needs in the field of illumination.

CERTIFICATE
Q-CERT

QMSCERT, an accredited provider of third-party system certification attests that:

PETRIDIS S.A.

Agios Athanasios, GR- 57003, Thessaloniki, Greece

with a scope of:

Design, Development, Production & Trading of Lightning Fittings, Metallic & Aluminum Lightning Poles, Signs & Lightning Signs

has established a Quality Management System that is in conformance with the requirements of the International Standard

EN ISO 9001:2015

Q-CERT

eucert
certification body

The management systems certification body eucert s.r.o. náměstí T.G. Masaryka 2957/9a, 690 02 Břeclav

CERTIFICATE

to confirm that

PETRIDIS AVEE LIGHTING BODIES S.A.

Agios Athanasios, 57003 Thessaloniki, Greece

Has implemented, maintains and is continually improving the management system according to the standard

EN ISO 14001:2015

in the area

Design, production, distribution, installation of lighting systems, metallic and aluminum lighting poles, signs and lighting signs.

The recertification audit, report no. RCA-GR-010-E, been proven that the management system meets the requirements of the above standard.

Certificate NO: E GR 005/21/version 1
Release date: 20.05.2023
Certification valid from: 20.05.2023
Certification valid till: 19.05.2026

Ing. Milan Gregoš
Head of the Certification body

IAF
S 3232
eucert

LIGHTING DESIGN

The advanced architectural solutions of our era, require the same dynamic approach and quality of lighting design, covering every ergonomic demand, efficiency and aesthetic upgrade of project. The lighting study is the coupling of art, technique and science of lighting and constitutes integral part of modern architectural design. It's the perfect combination of high quality, technological innovation and inspired design that increases the creative power of lighting, evolves his interaction in the space and the architecture and adds additional goodwill in the project while creating new experiences to people.

A team of experienced engineers, designers and lighting consultants of PETRIDIS SA collaborates daily with professionals and all of you to implement solutions in order to suit the lighting needs of each project, highlighting the uniqueness, always in accordance with international specifications and standards.

Our philosophy is summarized in the phrase:

"Humanergy Balance= Human Light + Energy Efficiency".

and is the concept of balance between the increase of well- being of people and maximum energy efficiency of a lighting project. It is achieved via an integrated lighting system that adjusts the balance of these two types with simultaneous environmental sensitivity using ecological materials and less energy-intensive light sources.

People should live and enjoy the premises, but also they should be activated by the lighting and thus improve their performance.

High performance, intelligent management of light and possibility of upgrade, mean that the investment is friendly to the environment, economical to operate and it is adapted in future altered situations.

Suitable and sufficient lighting, as defined by international standards, which highlights all the architectural features of the place and promotes the basic function.

Following the developments continuously as well as using new products, such as LED technology, the customer receives modern and innovative solutions, which provide ideal photographic results, reduced maintenance costs and power consumption as well.

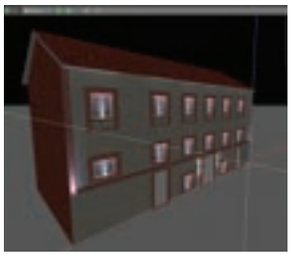
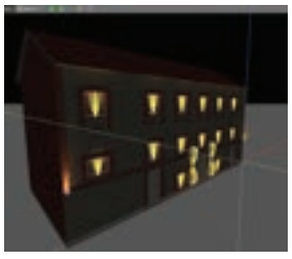

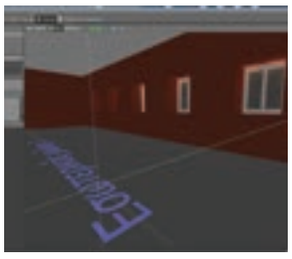

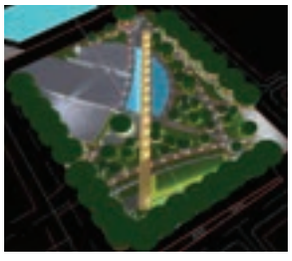
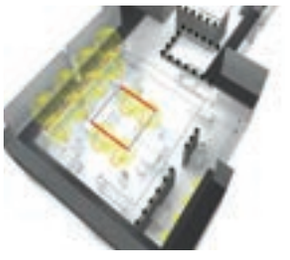

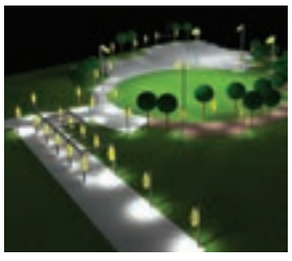

PARTNERS

Our company holds strong partnerships in many countries around the world, as you can see at the map below.
Contact by clicking on the country you are interested in.

If you are interested in a country that is not on our list, feel free to contact us immediately.

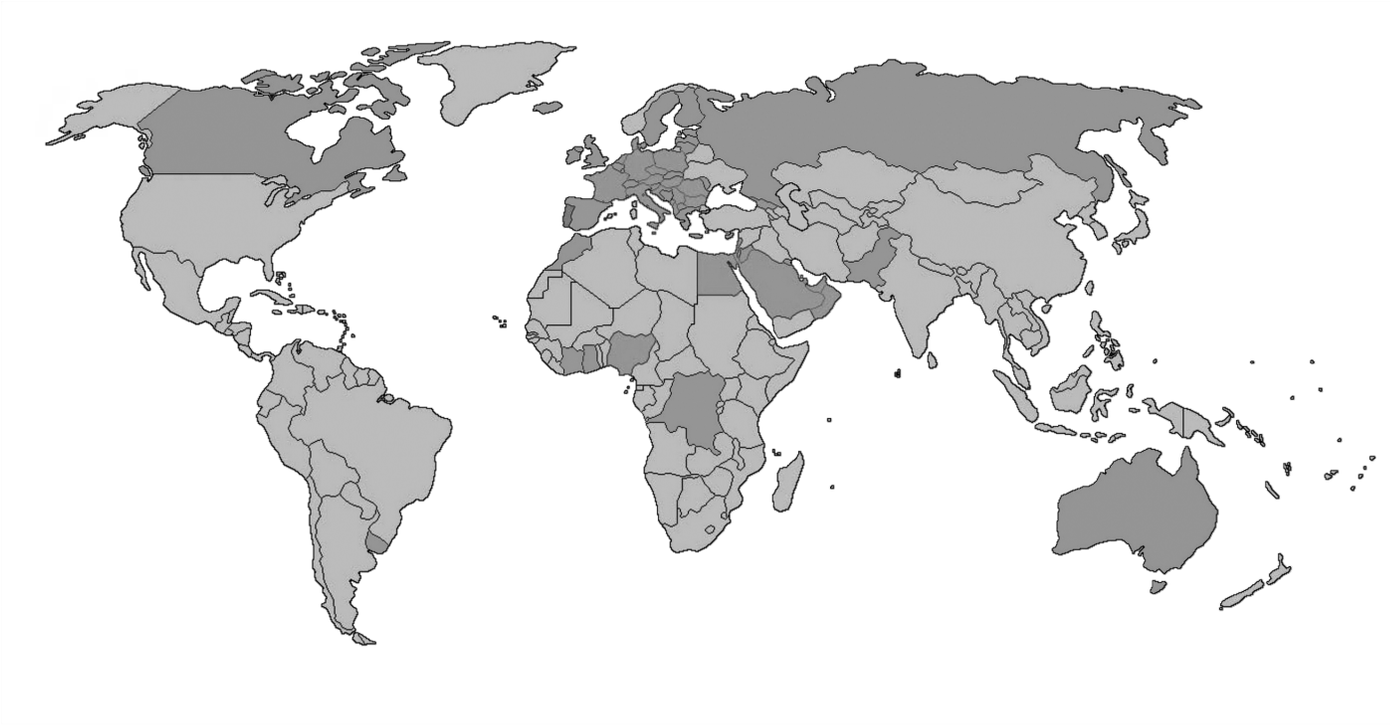

ALBANIA
AUSTRALIA
AUSTRIA
BAHRAIN
BELGIUM
BOSNIA - HERZEGOVINA
BULGARY
CANADA
CHANNEL ISLANDS
CONGO
CROATIA
CYPRUS
CZECH REPUBLIC
DENMARK
EGYPT
ESTONIA
FINLAND
FRANCE
GANA
GEORGIA
GERMANY
HONG KONG
HUNGARY
ICELAND
IRELAND
ISRAEL
ITALY
IVORY COAST
JORDAN
KOSOVO
KUWAIT
LATVIA
LEBANON
LITHUANIA
LUXEMBOURG
MALTA
MAYOTTE
MOLDOVA
MONTENEGRO
MOROCCO
NETHERLANDS
NIGERIA
NORTH MACEDONIA
OMAN
PAKISTAN
POLAND
PORTUGAL
QATAR
ROMANIA
RUSSIA
SAUDI ARABIA
SERBIA
SLOVAKIA
SLOVENIA
SPAIN
SWEDEN
SWITZERLAND
UNITED ARABIC EMIRATES
UNITED KINGDOM
URUGUAY

CATEGORIES

WALL LIGHTING INTERIOR

WALL LIGHTING INTERIOR

AMELIA
/ 412

MELLITA
/ 414

ARETI
/ 417

ARIA MINI APPLIQUE
/ 419

HELIX APPLIQUE
/ 427

X APPLIQUE
/ 428

EVA Branch
/ 429

EVA Arrow
/ 430

DECENTRATO
/ 442

HORN
/ 444

KERAS
/ 446

SLING APPLIQUE
/ 448

BEAM 1/BEAM 2 IP40
/ 462

BEAM 20
/ 464

BEAM 21
/ 468

ERIS 1 APPLIQUE
/ 472

NANO
/ 482

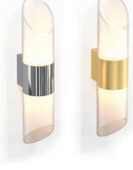

ELECTRA
/ 484

PENELOPE
/ 489

DANAI
/ 490

NATALIA
/ 501

IOKASTI
/ 504

IVI
/ 506

MORFI APPLIQUE
/ 508

MANTO
/ 420

LIA
/ 422

FEDRA
/ 425

WAVE APPLIQUE
/ 426

ILARIA
/ 432

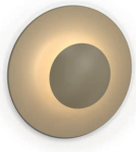

FUNGI
/ 434

STONE
/ 436

ECLIPSE
/ 438

YPSILON APPLIQUE
/ 450

KORONIS
/ 452

MINI APPLIQUES
/ 456

MINI BEAM
/ 458

GALATIA
/ 474

LITO
/ 476

KIRKI APPLIQUE
/ 478

EKALI APPLIQUE
/ 480

PANDORA
/ 492

DAFNI
/ 494

NEST
/ 496

ROOM
/ 497

HIGH-LOW APPLIQUE
/ 509

EASYLINE APPLIQUE
/ 514

SLOTLIGHT APPLIQUE
/ 518

AMELIA

AMELIA is an absolutely stunning and impressive LED applique, suitable for areas where, having an eyecatcher luminaire, is the main request.

Technical Features

- Aluminium body, painted electrostatically in selected colour.
- Aluminium mounting base.
- High efficient polycarbonate satin cover.
- Connection for operation with 230V/50Hz.

CE | F | IP **40** | **LED** | **850**°C | 5 years WARRANTY | ta 25°C | Included

- Aluminium body, painted electrostatically in selected colour.
- Driver 24V DC included.
- CRI: min. 80 / SDCM: 3
- Luminous Efficacy:
  20W: 4000 K: 140 Lm/Watt
  20W: 3000 K: 133 Lm/Watt

Code	Description	Kg
8200580■■	Amelia Applique Led 20W	1,200

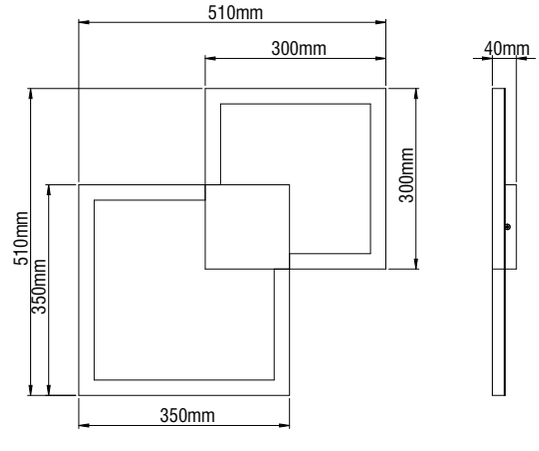

LED COLOUR CODES:	Colour Codes:
2 Warm 3 Neutral	0 Colours 1 White 2 Titan 3 Black

MELLITA

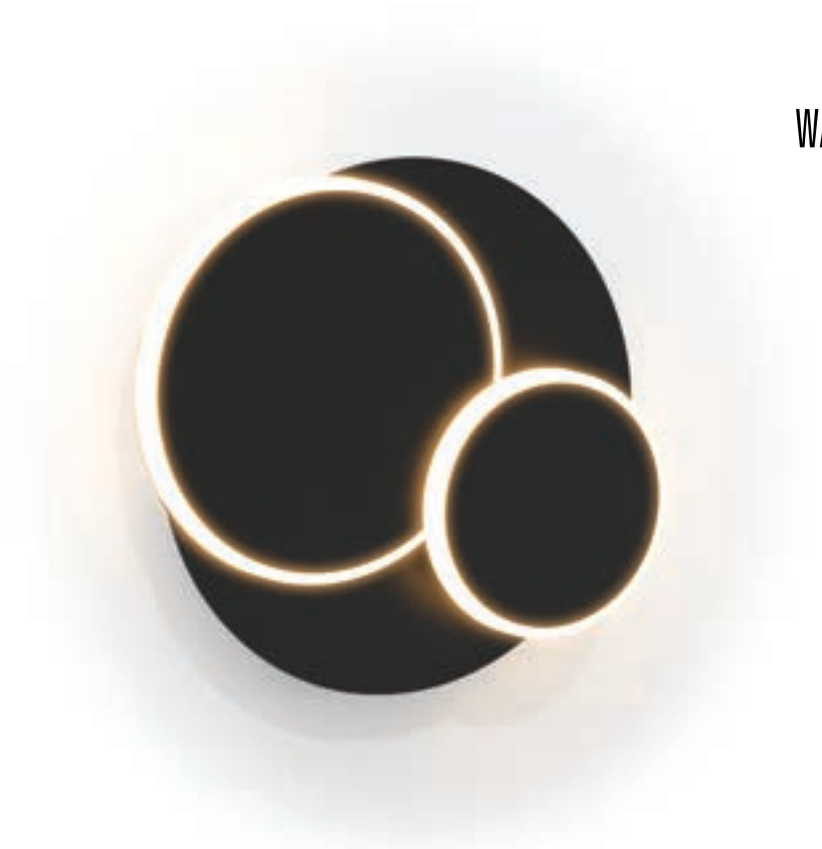

MELLITA is an minimal applique with LED source.
It is ideal for hotels, reception halls, bars, restaurants, houses etc.

Technical Features

- Aluminium body, painted electrostatically in selected colour and PMMA.
- Aluminium mounting base.
- Connection for operation with 230V/50Hz.

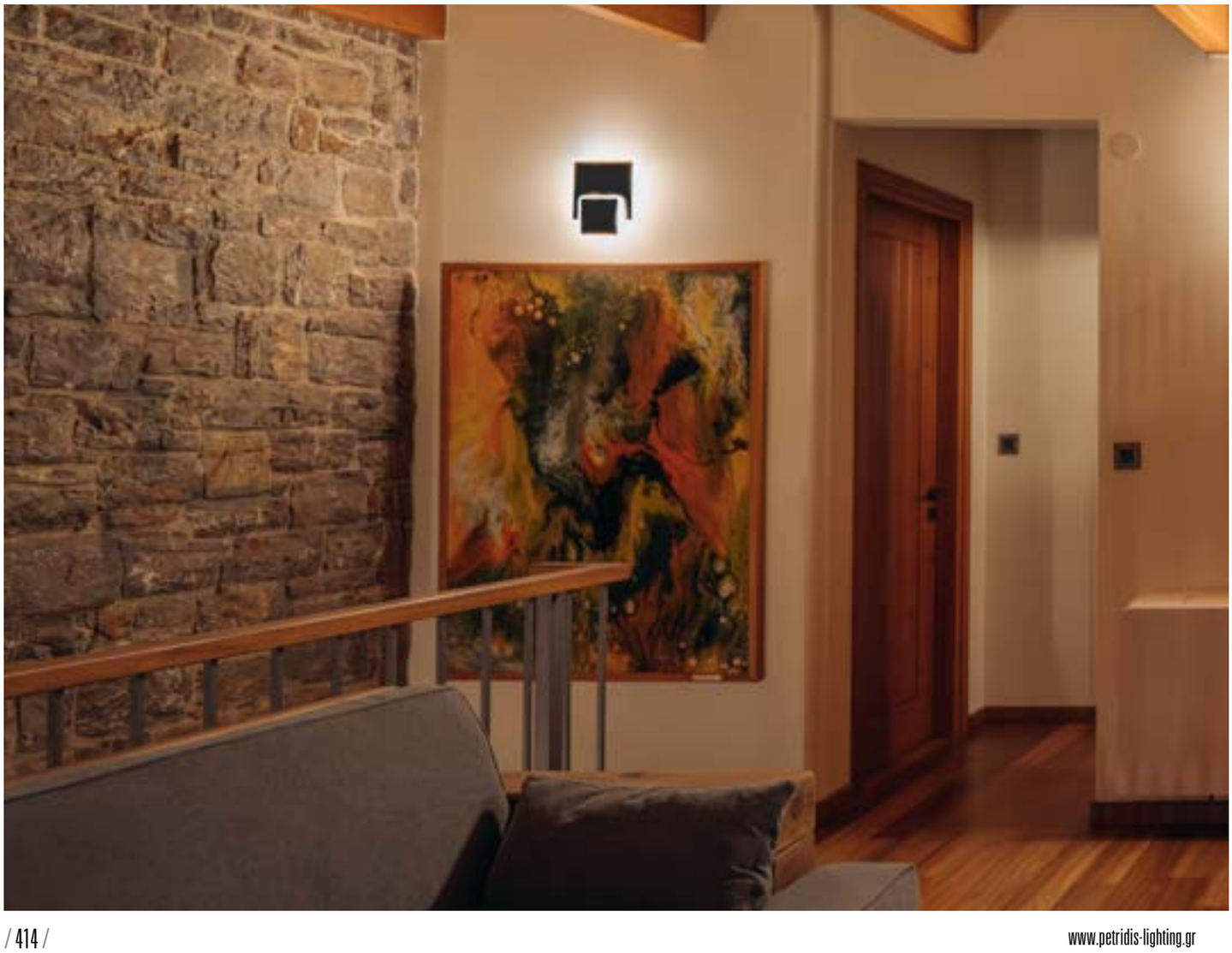

MELLITA

MELLITA R

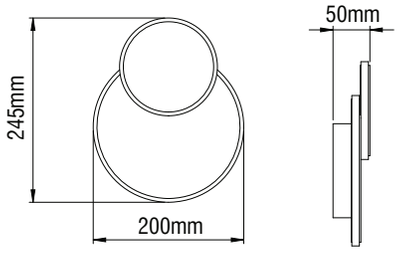

IP 40 | LED | 850ºC | 5 years WARRANTY | ta 25ºC | Included

- Aluminium body, painted electrostatically in selected colour.
- Driver 24V DC included.
- CRI: min. 80 / SDCM: 3
- Luminous Efficacy:
  140Lm/W at 4000 K
  133Lm/W at 3000 K

Code	Description	Kg
85152■	MELLITA R 8W Warm	0,800
85153■	MELLITA R 8W Neutral	0,800

MELLITA SQ

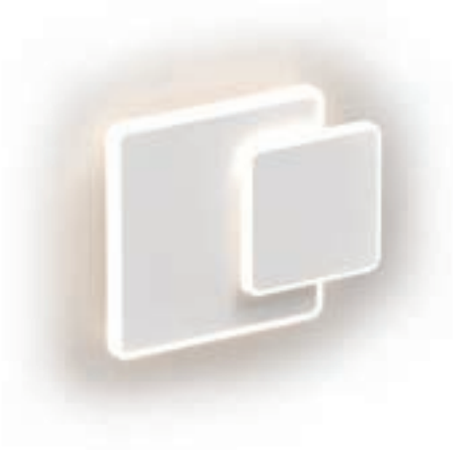

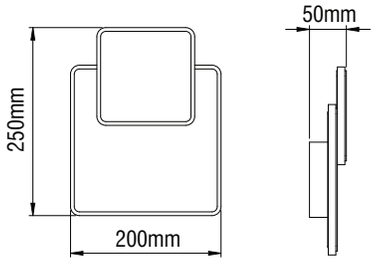

IP 40 | LED | 850ºC | 5 years WARRANTY | ta 25ºC | Included

- Aluminium body, painted electrostatically in selected colour.
- Driver 24V DC included.
- CRI: min. 80 / SDCM: 3
- Luminous Efficacy:
  140Lm/W at 4000 K
  133Lm/W at 3000 K

Code	Description	Kg
85154■	MELLITA SQ 10W Warm	0,800
85155■	MELLITA SQ 10W Neutral	0,800

MELLITA TRIPLE

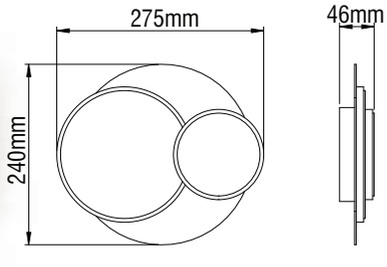

IP 40 | LED | 850ºC | 5 years WARRANTY | ta 25ºC | Included

- Aluminium body, painted electrostatically in selected colour.
- Driver 24V DC included.
- CRI: min. 80 / SDCM: 3
- Luminous Efficacy:
  140Lm/W at 4000 K
  133Lm/W at 3000 K

Code	Description	Kg
85156■	MELLITA TRIPLE 11W Warm	1,000
85157■	MELLITA TRIPLE 11W Neutral	1,000

Colour Codes:
0 Colours | 1 White | 2 Titan | 3 Black

ARETI

ARETI is an minimal applique with LED source.
It is ideal for hotels, reception halls, bars, restaurants, houses etc.

Technical Features

- Aluminium body, painted electrostatically in selected colour.
- High efficient polycarbonate satin cover.
- Connection for operation with 230V/50Hz.

ARETI

ARETI H IN

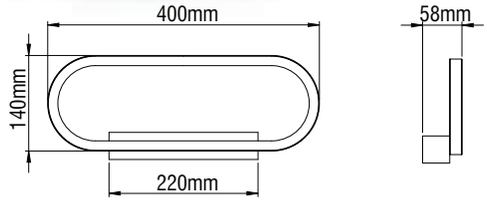

IP 40 | LED | 850ºC | 5 years WARRANTY | ta 25ºC | Included

- Aluminium body, painted electrostatically in selected colour.
- Aluminium mounting base.
- Driver 24V DC included.
- CRI: min. 80 / SDCM: 3
- Luminous Efficacy:
  140Lm/W at 4000 K
  133Lm/W at 3000 K

Code	Description	Kg
8200620■■	ARETI H IN 16W	1,000

ARETI H OUT

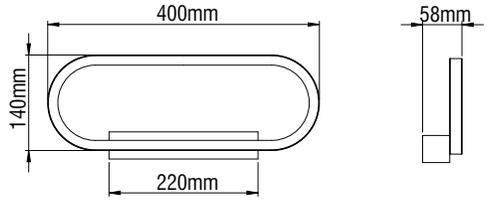

IP 40 | LED | 850ºC | 5 years WARRANTY | ta 25ºC | Included

- Aluminium body, painted electrostatically in selected colour.
- Aluminium mounting base.
- Driver 24V DC included.
- CRI: min. 80 / SDCM: 3
- Luminous Efficacy:
  140Lm/W at 4000 K
  133Lm/W at 3000 K

Code	Description	Kg
8200621■■	ARETI H OUT 16W	1,000

ARETI V IN

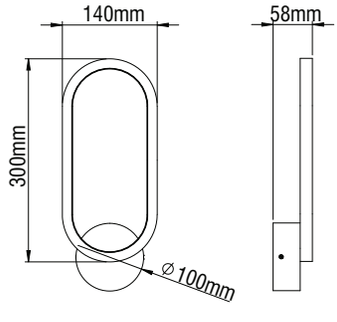

IP 40 | LED | 850ºC | 5 years WARRANTY | ta 25ºC | Included

- Aluminium body, painted electrostatically in selected colour.
- Steel mounting base.
- Driver 24V DC included.
- CRI: min. 80 / SDCM: 3
- Luminous Efficacy:
  140Lm/W at 4000 K
  133Lm/W at 3000 K

Code	Description	Kg
8200622■■	ARETI V IN 12W	1,000

ARETI V OUT

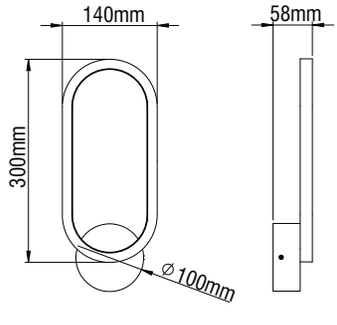

IP 40 | LED | 850ºC | 5 years WARRANTY | ta 25ºC | Included

- Aluminium body, painted electrostatically in selected colour.
- Steel mounting base.
- Driver 24V DC included.
- CRI: min. 80 / SDCM: 3
- Luminous Efficacy:
  140Lm/W at 4000 K
  133Lm/W at 3000 K

Code	Description	Kg
8200623■■	ARETI V OUT 12W	1,000

LED COLOUR CODES: 2 Warm 3 Neutral

Colour Codes: 0 Colours 1 White 2 Titan 3 Black

ARIA MINI APPLIQUE

ARIA MINI APPLIQUE is an minimal applique with LED source.
It is ideal for hotels, reception halls, bars, restaurants, houses etc.

Technical Features

- Aluminium body, painted electrostatically in selected colour.
- High efficient polycarbonate satin cover.
- Pure light without IR/UV radiation.
- Operation life: 50,000 hours with efficiency > 80% of the initial luminous flux (L80B10).
- Connection for operation on 230V/50Hz.

IP **40** | **850**°C | **LED** | 5 years WARRANTY | ta 25°C | Included

- Aluminium body, painted electrostatically in selected colour.
- Driver 24V DC included.
- CRI: min. 80 / SDCM: 3
- Luminous Efficacy:
  140Lm/W at 4000 K
  133Lm/W at 3000 K

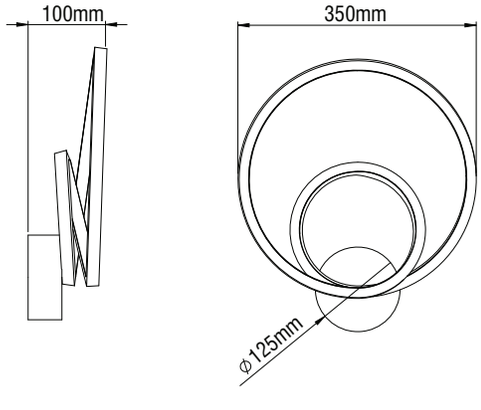

Code	Description	Kg
82006402■	ARIA MINI APPLIQUE 25W Warm	0,800
82006403■	ARIA MINI APPLIQUE 25W Neutral	0,800

Colour Codes:
0 Colours | 1 White | 2 Titan | 3 Black

MANTO

MANTO is an absolutely stunning and impressive LED applique, suitable for areas where, having an eyecatcher luminaire, is the main request.

Technical Features

- Aluminium body, painted electrostatically in selected colour.
- Aluminium mounting base.
- High efficient polycarbonate satin cover.
- Connection for operation with 230V/50Hz.

MANTO

MANTO R

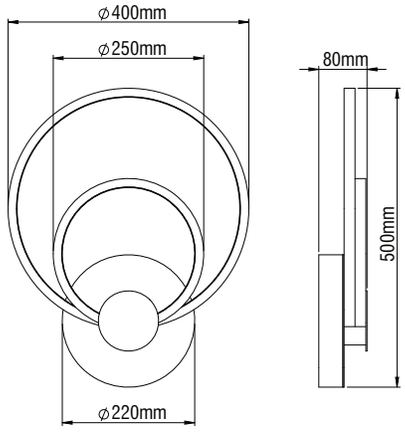

IP 40 | LED | 850°C | 5 years WARRANTY | ta 25°C | Included

- Aluminium body, painted electrostatically in selected colour.
- Driver 24V DC included.
- CRI: min. 80 / SDCM: 3
- Luminous Efficacy:
  140Lm/W at 4000 K
  133Lm/W at 3000 K

Code	Description
8200626■■	MANTO R 33W
8200627■■	MANTO R 33W Dimmer (dali / push button)
8200628■■	MANTO R 33W Dimmer (phase cut)

MANTO SQ

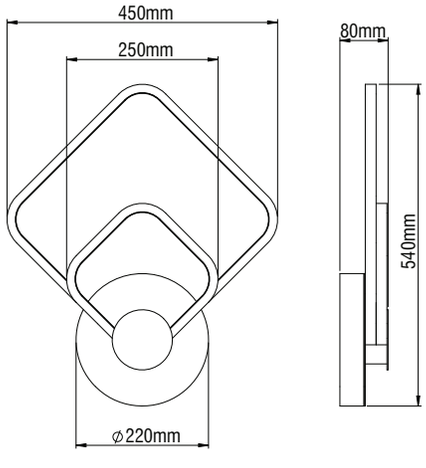

IP 40 | LED | 850°C | 5 years WARRANTY | ta 25°C | Included

- Aluminium body, painted electrostatically in selected colour.
- Driver 24V DC included.
- CRI: min. 80 / SDCM: 3
- Luminous Efficacy:
  140Lm/W at 4000 K
  133Lm/W at 3000 K

Code	Description
8200629■■	MANTO SQ 33W
8200630■■	MANTO SQ 33W Dimmer (dali / push button)
8200631■■	MANTO SQ 33W Dimmer (phase cut)

LED COLOUR CODES: 2 Warm 3 Neutral

Colour Codes: 0 Colours 1 White 2 Titan 3 Black

LIA

LIA is an minimal applique with LED source.
It is ideal for hotels, reception halls, bars, restaurants, houses etc.

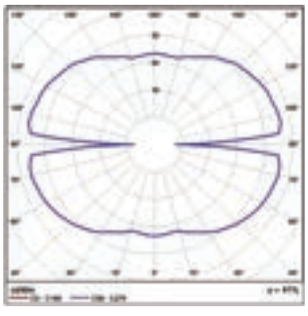

Technical Features

- Aluminium body, painted electrostatically in selected colour.
- High efficient polycarbonate satin cover.
- Pure light without IR/UV radiation.
- Operation life: 50,000 hours with efficiency > 80% of the initial luminous flux (L80B10).
- Connection for operation on 230V/50Hz.

CE | F | IP **40** | **850**°C | **LED** | years 5 WARRANTY | ta 25°C | Included

- Aluminium body, painted electrostatically in selected colour.
- Driver 24V DC included.
- CRI: min. 80 / SDCM: 3
- Luminous Efficacy:
  140Lm/W at 4000 K
  133Lm/W at 3000 K

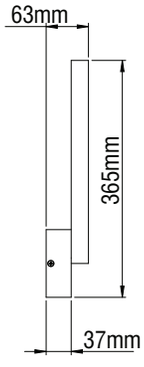

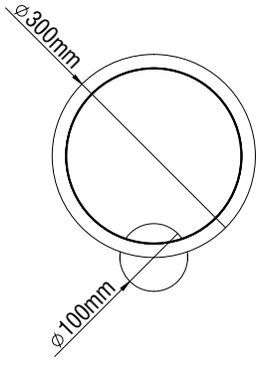

Code	Description	Kg
85956■	LIA LED ∅300mm 15W Warm	0,800
85957■	LIA LED ∅300mm 15W Neutral	0,800

Colour Codes:
0 Colours 1 White 2 Titan 3 Black

FEDRA

FEDRA is an minimal applique with LED source.
It is ideal for hotels, reception halls, bars, restaurants, houses etc.

Technical Features

- Aluminium body, painted electrostatically in selected colour.
- High efficient polycarbonate satin cover.
- Pure light without IR/UV radiation.
- Operation life: 50,000 hours with efficiency > 80% of the initial luminous flux (L80B10).
- Connection for operation on 230V/50Hz.

CE | F | IP **40** | **850**°C | **LED** | years 5 WARRANTY | ta 25°C | Included

- Aluminium body, painted electrostatically in selected colour.
- Driver 24V DC included.
- CRI: min. 80 / SDCM: 3
- Luminous Efficacy:
  140Lm/W at 4000 K
  133Lm/W at 3000 K

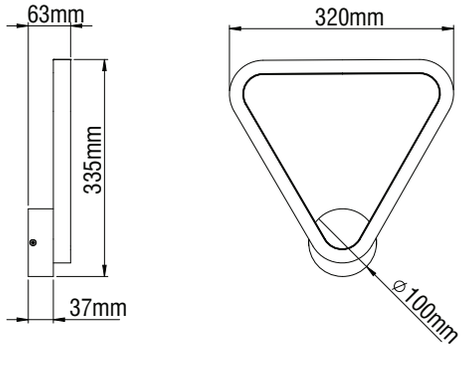

Code	Description	Kg
85958■	FEDRA LED 15W Warm	0,800
85959■	FEDRA LED 15W Neutral	0,800

Colour Codes:
0 Colours | 1 White | 2 Titan | 3 Black

WAVE APPLIQUE

WAVE APPLIQUE is an absolutely stunning and impressive LED applique, suitable for areas where, having an eyecatcher luminaire, is the main request.

Technical Features

- Aluminium body, painted electrostatically in selected colour.
- Aluminium mounting base.
- High efficient polycarbonate satin cover.
- Connection for operation with 230V/50Hz.

CE | F | IP **40** | **LED** | **850**°C | years 5 WARRANTY | ta 25°C | Included

- Aluminium body, painted electrostatically in selected colour.
- Driver 24V DC included.
- CRI: min. 80 / SDCM: 3
- Luminous Efficacy:
  140 Lm/Watt at 4000 K
  133 Lm/Watt at 3000 K

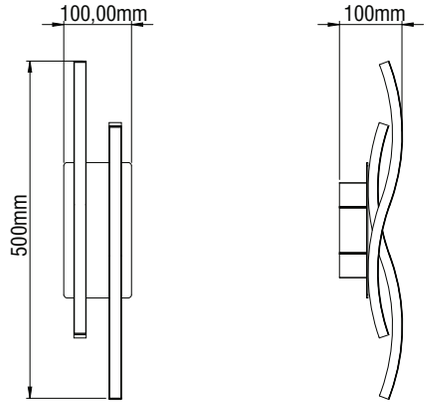

Code	Description
82006242■	Wave Applique 14W Warm
82006243■	Wave Applique 14W Neutral

Colour Codes:
0 Colours | 1 White | 2 Titan | 3 Black | 5 Matt Alum. | 8 Metal Colours

HELIX APPLIQUE

HELIX APPLIQUE is an absolutely stunning and impressive LED applique, suitable for areas where, having an eyecatcher luminaire, is the main request.

Technical Features

- Aluminium body, painted electrostatically in selected colour.
- Steel mounting base.
- High efficient polycarbonate satin cover.
- Connection for operation with 230V/50Hz.

CE | F | IP **40** | **LED** | **850**°C | years 5 WARRANTY | ta 25°C | Included

- Aluminium body, painted electrostatically in selected colour.
- Driver 24V DC included.
- CRI: min. 80 / SDCM: 3
- Luminous Efficacy:
  140 Lm/Watt at 4000 K
  133 Lm/Watt at 3000 K

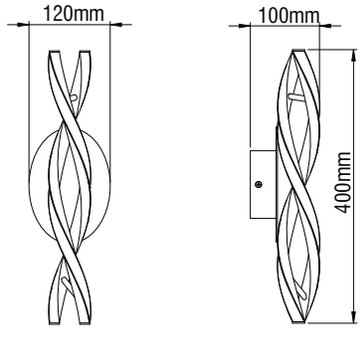

Code	Description
82006252■	Helix Applique 12W Warm
82006253■	Helix Applique 12W Neutral

Colour Codes:
0 Colours | 1 White | 2 Titan | 3 Black | 5 Matt Alum. | 8 Metal Colours

X APPLIQUE

X APPLIQUE is an absolutely stunning and impressive LED applique, suitable for areas where, having an eyecatcher luminaire, is the main request.

Technical Features

- Aluminium body, painted electrostatically in selected colour.
- Steel mounting base.
- High efficient polycarbonate satin cover.
- Connection for operation with 230V/50Hz.

IP 40 | LED | 850°C | 5 years WARRANTY | ta 25°C | Included

- Aluminium body, painted electrostatically in selected colour.
- Driver 24V DC included.
- CRI: min. 80 / SDCM: 3
- Luminous Efficacy:
  140 Lm/Watt at 4000 K
  133 Lm/Watt at 3000 K

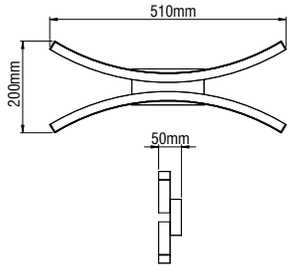

Code	Description
82005152■	X Applique 15W Warm
82005153■	X Applique 15W Neutral

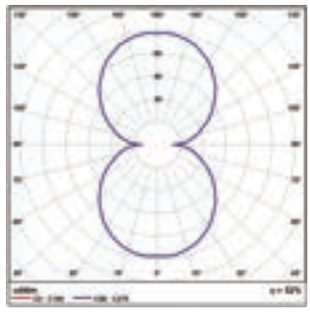

Colour Codes:
0 Colours | 1 White | 2 Titan | 3 Black | 5 Matt Alum. | 8 Metal Colours

EVA BRANCH

EVA BRANCH is an absolutely stunning and impressive LED applique, suitable for areas where, having an eyecatcher luminaire, is the main request.

Technical Features

- Aluminium body, painted electrostatically in selected colour.
- Steel mounting base.
- High efficient polycarbonate satin cover.
- Connection for operation with 230V/50Hz.

CE | F | IP **40** | **LED** | **850**°C | years 5 WARRANTY | ta 25°C | Included

- Aluminium body, painted electrostatically in selected colour.
- Driver 24V DC included.
- CRI: min. 80 / SDCM: 3
- Luminous Efficacy:
  140 Lm/Watt at 4000 K
  133 Lm/Watt at 3000 K

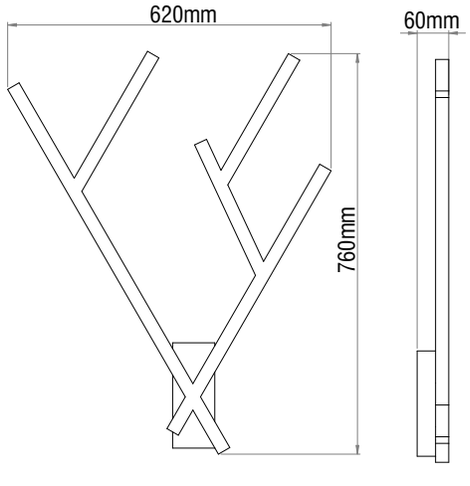

Code	Description
85870■	Eva Branch Led 20W Warm
85871■	Eva Branch Led 20W Neutral

Colour Codes:
0 Colours | 1 White | 2 Titan | 3 Black | 5 Matt Alum. | 8 Metal Colours

EVA ARROW

EVA ARROW is an absolutely stunning and impressive LED applique, suitable for areas where, having an eyecatcher luminaire, is the main request.

Technical Features

- Aluminium body, painted electrostatically in selected colour.
- Steel mounting base.
- High efficient polycarbonate satin cover.
- Connection for operation with 230V/50Hz.

CE | F | IP **40** | **LED** | **850**°C | years 5 WARRANTY | ta 25°C | Included

- Aluminium body, painted electrostatically in selected colour.
- Driver 24V DC included.
- CRI: min. 80 / SDCM: 3
- Luminous Efficacy:
  6,7W: 4000 K: 140 Lm/Watt
  6,7W: 3000 K: 133 Lm/Watt

Code	Description
85872■	Eva Arrow Led 6,7W Warm
85873■	Eva Arrow Led 6,7W Neutral

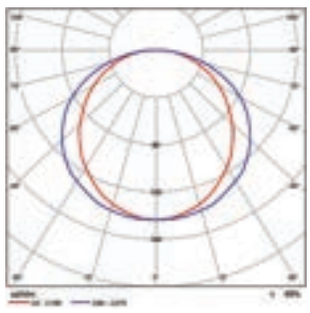

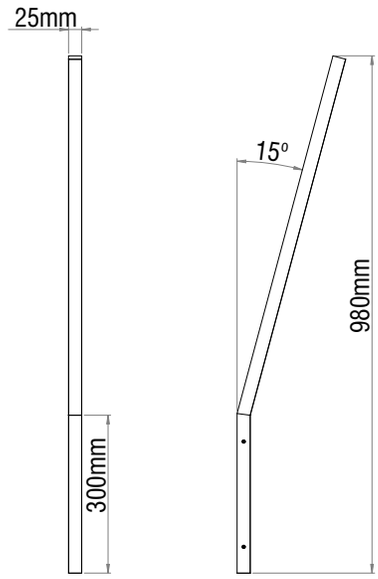

Colour Codes:
0 Colours | 1 White | 2 Titan | 3 Black | 5 Matt Alum. | 8 Metal Colours

EVA ARROW

ILARIA

A luminaire with a contemporary design.
ILARIA is a piece of architecture, perfect for adding stature to an area.
With it's gentle lighting, it upgrades areas such as lobbies, corridors, offices, stores and homes.

Technical Features

- Aluminium body, painted electrostatically in selected colour.
- High efficient polycarbonate satin cover.
- Pure light without IR/UV radiation.
- Operation life: 50,000 hours with efficiency > 80% of the initial luminous flux (L80B10).
- Connection for operation on 230V/50Hz.

Upon request
At special dimensions.

ILARIA

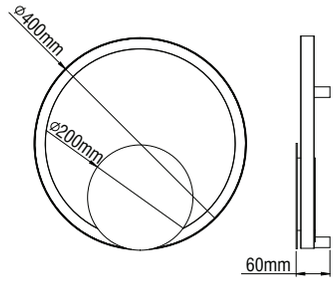

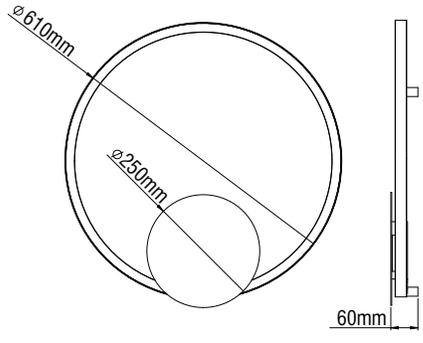

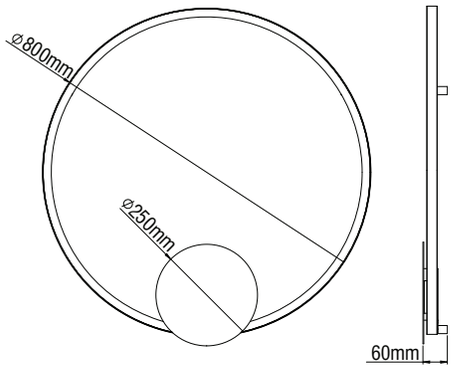

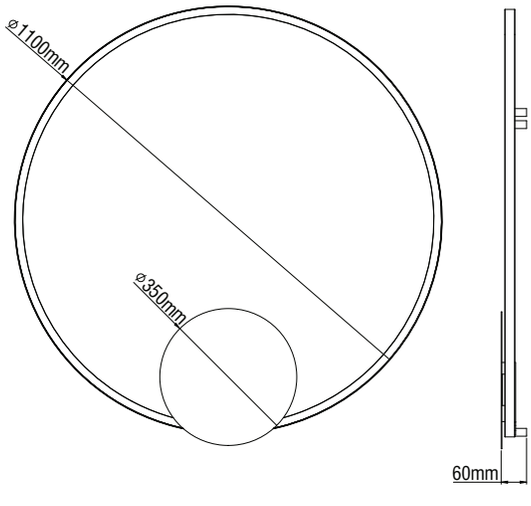

IP 40 | LED | 850°C | 5 years WARRANTY | ta 25°C | Included

- Aluminium body, painted electrostatically in selected colour.
- Driver 24V DC included.
- CRI: min. 80 / SDCM: 3
- Luminous Efficacy:
  140Lm/W at 4000 K
  133Lm/W at 3000 K

Code	Description	kg
8200601■■	ILARIA 1 18W Ø400mm	1,900
8200602■■	ILARIA 2 28W Ø610mm	2,050
8200603■■	ILARIA 3 36W Ø800mm	2,350
8200604■■	ILARIA 4 50W Ø1100mm	3,600
8200605■■	ILARIA 5 66W Ø1450mm	4,030
8200606■■	ILARIA 1 18W Ø400mm Dimmer (dali / push button)	2,400
8200607■■	ILARIA 2 28W Ø610mm Dimmer (dali / push button)	2,550
8200608■■	ILARIA 3 36W Ø800mm Dimmer (dali / push button)	2,850
8200609■■	ILARIA 4 50W Ø1100mm Dimmer (dali / push button)	3,800
8200610■■	ILARIA 5 66W Ø1450mm Dimmer (dali / push button)	4,230
8200612■■	ILARIA 2 28W Ø610mm Dimmer (phase cut)	2,370
8200613■■	ILARIA 3 36W Ø800mm Dimmer (phase cut)	2,670
8200614■■	ILARIA 4 50W Ø1100mm Dimmer (phase cut)	3,700
8200615■■	ILARIA 5 66W Ø1450mm Dimmer (phase cut)	4,130

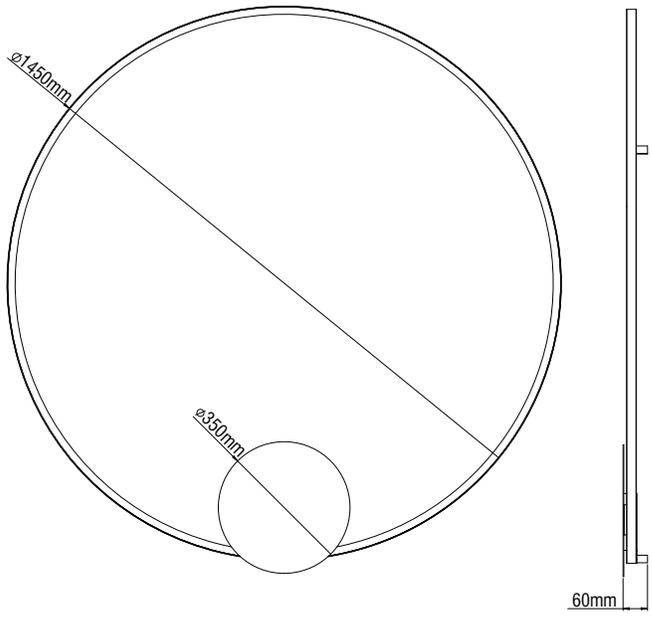

LED COLOUR CODES: 2 Warm 3 Neutral

Colour Codes: 0 Colours 1 White 2 Titan 3 Black

FUNGI

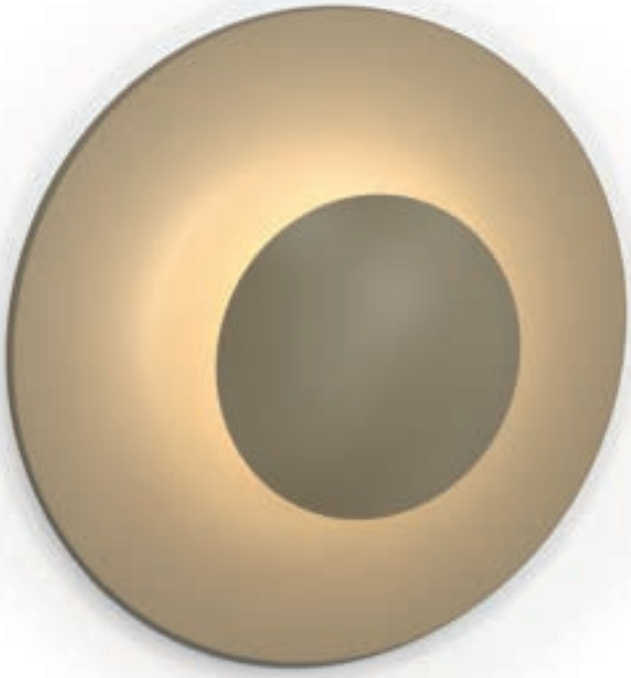

FUNGI is an minimal applique with LED source.
It is ideal for hotels, reception halls, bars, restaurants, houses etc.

Technical Features

- Aluminium body, painted electrostatically in selected colour.
- Pure light without IR/UV radiation.
- Operation life: 50,000 hours with efficiency > 80% of the initial luminous flux (L80B10).
- Connection for operation on 230V/50Hz.

FUNGI

FUNGI SMALL

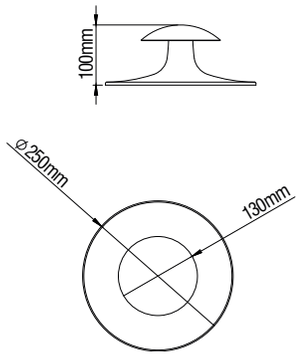

IP 40 | LED | 850°C | 5 years WARRANTY | ta 25°C | Included

- Aluminium body, painted electrostatically in selected colour.
- Driver 24V DC included.
- CRI: min. 80 / SDCM: 3
- Luminous Efficacy:
  140Lm/W at 4000 K
  133Lm/W at 3000 K

Code	Description
85990■	FUNGI Small 5W Warm
85991■	FUNGI Small 5W Neutral

FUNGI

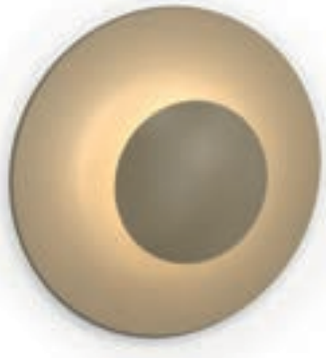

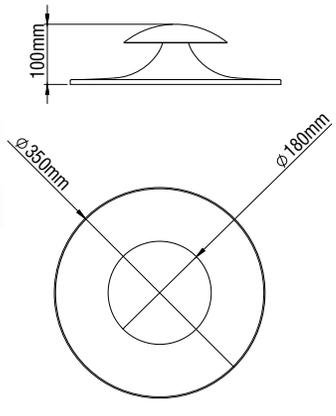

IP 40 | LED | 850°C | 5 years WARRANTY | ta 25°C | Included

- Aluminium body, painted electrostatically in selected colour.
- Driver 24V DC included.
- CRI: min. 80 / SDCM: 3
- Luminous Efficacy:
  140Lm/W at 4000 K
  133Lm/W at 3000 K

Code	Description
85992■	FUNGI 7W Warm
85993■	FUNGI 7W Neutral

Colour Codes:
0 Colours | 1 White | 2 Titan | 3 Black

STONE

WALL LIGHTING INTERIOR

STONE is an minimal applique with LED source.
It is ideal for hotels, reception halls, bars, restaurants, houses etc.

Technical Features

- Aluminium body, painted electrostatically in selected colour.
- Pure light without IR/UV radiation.
- Operation life: 50,000 hours with efficiency > 80% of the initial luminous flux (L80B10).
- Connection for operation on 230V/50Hz.

STONE

STONE 1

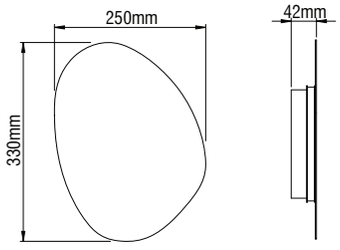

IP 40 | 850ºC | LED | 5 years WARRANTY | ta 25ºC | Included

- Aluminium body, painted electrostatically in selected colour.
- Driver 24V DC included.
- CRI: min. 80 / SDCM: 3
- Luminous Efficacy:
  140Lm/W at 4000 K
  133Lm/W at 3000 K

STONE 2

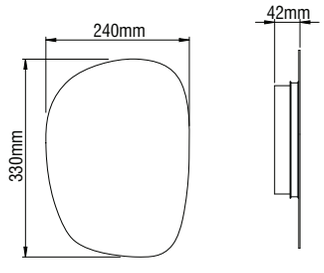

Code	Description	Kg
85780■	STONE 1 10W Warm	0,800
85781■	STONE 1 10W Neutral	0,800
85782■	STONE 2 10W Warm	0,800
85783■	STONE 2 10W Neutral	0,800
85784■	STONE 3 10W Warm	0,800
85785■	STONE 3 10W Neutral	0,800
85786■	STONE 4 7W Warm	0,600
85787■	STONE 4 7W Neutral	0,600

STONE 3

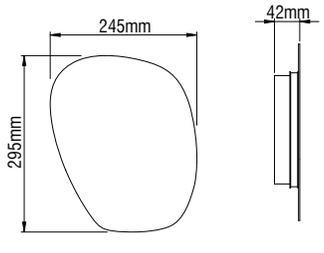

STONE 4

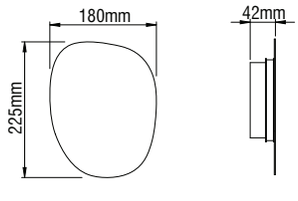

Colour Codes:
0 Colours | 1 White | 2 Titan | 3 Black

ECLIPSE

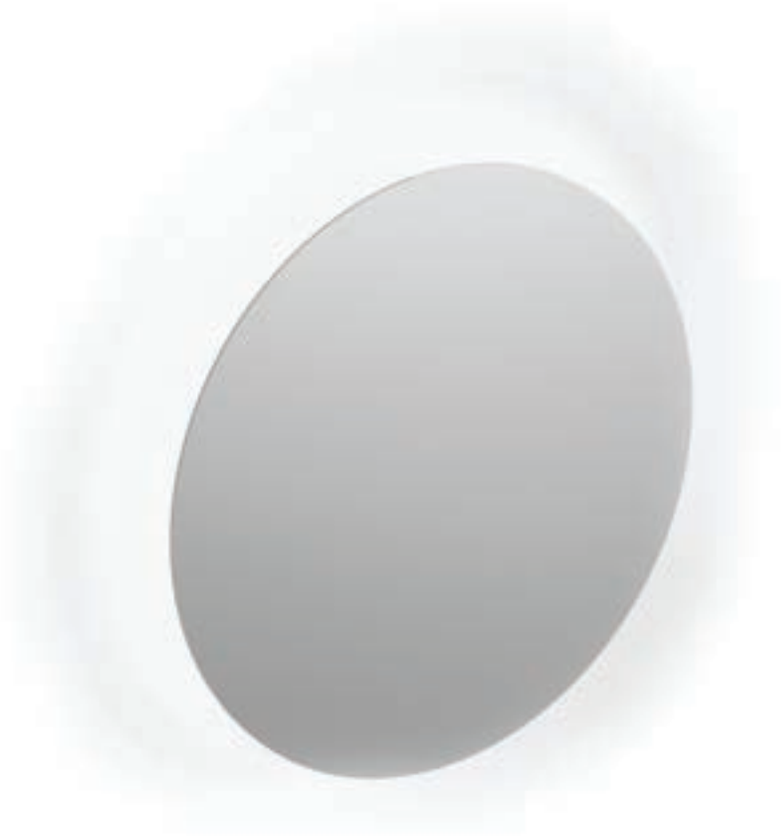

ECLIPSE is an minimal applique with LED source.
It is ideal for hotels, reception halls, bars, restaurants, houses etc.

Technical Features

- Aluminium body, painted electrostatically in selected colour.
- Pure light without IR/UV radiation.
- Operation life: 50,000 hours with efficiency > 80% of the initial luminous flux (L80B10).
- Connection for operation on 230V/50Hz.

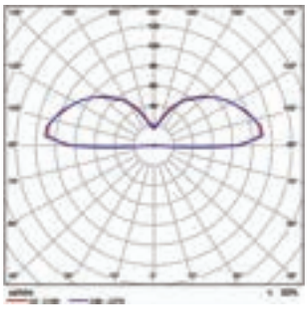

ECLIPSE

ECLIPSE

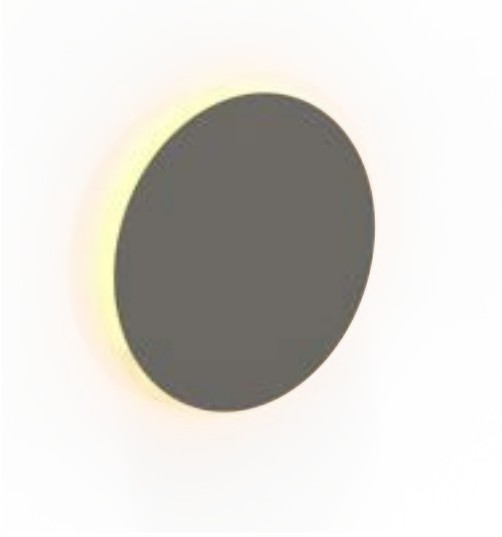

IP **40** | **850**°C | LED | 5 years WARRANTY | ta 25°C | Included

- Aluminium body, painted electrostatically in selected colour.
- Driver 24V DC included.
- CRI: min. 80 / SDCM: 3
- Luminous Efficacy:
  140Lm/W at 4000 K
  133Lm/W at 3000 K

Code	Description	Kg
85901▪	ECLIPSE ∅200 7W Warm	0,600
85902▪	ECLIPSE ∅200 7W Neutral	0,600
85903▪	ECLIPSE ∅300 8W Warm	0,800
85904▪	ECLIPSE ∅300 8W Neutral	0,800
85905▪	ECLIPSE ∅400 15W Warm	1,000
85906▪	ECLIPSE ∅400 15W Neutral	1,000

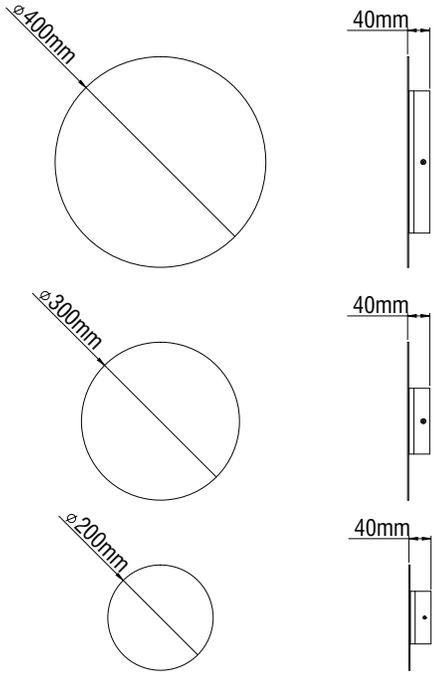

Colour Codes:
0 Colours | 1 White | 2 Titan | 3 Black

ECLIPSE

ECLIPSE Q

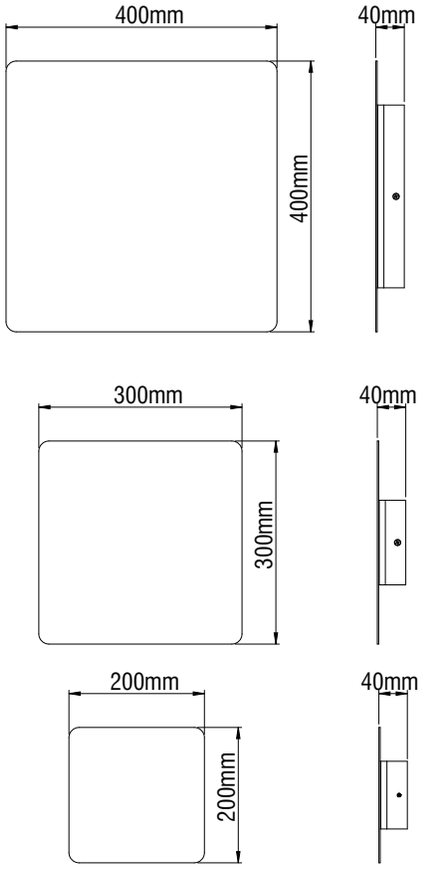

IP **40** | **850**°C | LED | 5 years WARRANTY | ta 25°C | Included

- Aluminium body, painted electrostatically in selected colour.
- Driver 24V DC included.
- CRI: min. 80 / SDCM: 3
- Luminous Efficacy:
  140Lm/W at 4000 K
  133Lm/W at 3000 K

Code	Description	Kg
85974■	ECLIPSE Q 200x200 7W Warm	0,600
85975■	ECLIPSE Q 200x200 7W Neutral	0,600
85976■	ECLIPSE Q 300x300 13W Warm	0,800
85977■	ECLIPSE Q 300x300 13W Neutral	0,800
85978■	ECLIPSE Q 400x400 18W Warm	1,000
85979■	ECLIPSE Q 400x400 18W Neutral	1,000

ECLIPSE PR

IP **40** | **850**°C | LED | 5 years WARRANTY | ta 25°C | Included

- Aluminium body, painted electrostatically in selected colour.
- Driver 24V DC included.
- CRI: min. 80 / SDCM: 3
- Luminous Efficacy:
  140Lm/W at 4000 K
  133Lm/W at 3000 K

Code	Description	Kg
85980■	ECLIPSE PR 300x150 8W Warm	0,600
85981■	ECLIPSE PR 300x150 8W Neutral	0,600

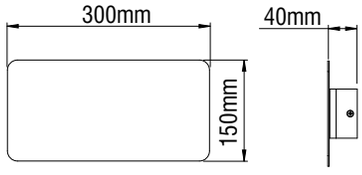

Colour Codes:
0 Colours | 1 White | 2 Titan | 3 Black

DECENTRATO

DECENTRATO is an minimal applique with LED source.
It is ideal for hotels, reception halls, bars, restaurants, houses etc.

Technical Features

- Aluminium body, painted electrostatically in selected colour.
- Pure light without IR/UV radiation.
- Operation life: 50,000 hours with efficiency > 80% of the initial luminous flux (L80B10).
- Connection for operation on 230V/50Hz.

CE | F | IP **20** | **850**°C | LED | years 5 WARRANTY | ta 25°C | Included

- Aluminium body, painted electrostatically in selected colour.
- Driver 24V DC included.
- CRI: min. 80 / SDCM: 3
- Luminous Efficacy:
  140Lm/W at 4000 K
  133Lm/W at 3000 K

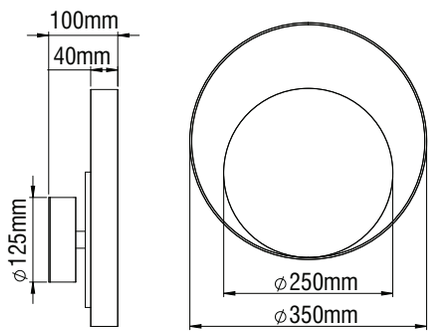

Code	Description	Kg
85920■	DECENTRATO ∅350mm 6W Warm	0,800
85921■	DECENTRATO ∅350mm 6W Neutral	0,800

Colour Codes:
0 Colours 1 White 2 Titan 3 Black

HORN

HORN is a majestic applique that adds an extra artistic touch to an interior, giving it an exclusively powerful look.

Technical Features

- Aluminium body, painted electrostatically in selected colour.
- Steel mounting base.
- High efficient polycarbonate satin cover.
- Connection for operation with 230V/50Hz.

HORN

HORN SMALL

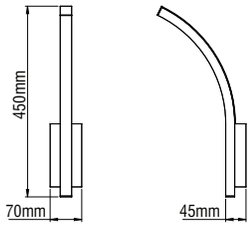

IP 40 | LED | 850°C | 5 years WARRANTY | ta 25°C | Included

- Aluminium body.
- Driver 24V DC included.
- CRI: min. 80 / SDCM: 3
- Luminous Efficacy:
  4,5W: 4000 K: 140 Lm/Watt
  4,5W: 3000 K: 133 Lm/Watt

Code	Description
82005202■	Horn Small 4,5W Warm
82005203■	Horn Small 4,5W Neutral

HORN MEDIUM

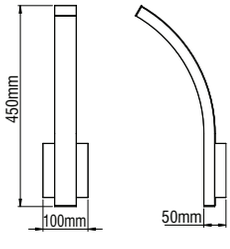

IP 40 | LED | 850°C | 5 years WARRANTY | ta 25°C | Included

- Aluminium body.
- Driver 24V DC included.
- CRI: min. 80 / SDCM: 3
- Luminous Efficacy:
  9W: 4000 K: 140 Lm/Watt
  9W: 3000 K: 133 Lm/Watt

Code	Description
82005212■	Horn Medium 9W Warm
82005213■	Horn Medium 9W Neutral

Colour Codes:
0 Colours | 1 White | 2 Titan | 3 Black | 5 Matt Alum. | 8 Metal Colours

KERAS

KERAS is a majestic applique that adds an extra artistic touch to an interior, giving it an exclusively powerful look.

Technical Features

- Aluminium body, painted electrostatically in selected colour.
- Steel mounting base.
- High efficient polycarbonate satin cover.
- Connection for operation with 230V/50Hz.

KERAS

KERAS SMALL

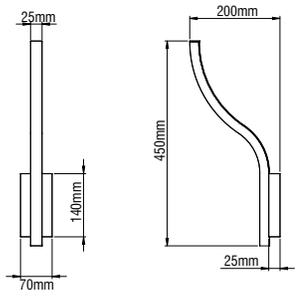

IP 40 | LED | 850°C | 5 years WARRANTY | ta 25°C | Included

- Aluminium body.
- Driver 24V DC included.
- CRI: min. 80 / SDCM: 3
- Luminous Efficacy:
  4,5W: 4000 K: 140 Lm/Watt
  4,5W: 3000 K: 133 Lm/Watt

Code	Description
82005002■	Keras Small 4,5W Warm
82005003■	Keras Small 4,5W Neutral

KERAS MEDIUM

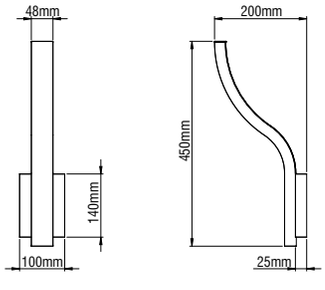

IP 40 | LED | 850°C | 5 years WARRANTY | ta 25°C | Included

- Aluminium body.
- Driver 24V DC included.
- CRI: min. 80 / SDCM: 3
- Luminous Efficacy:
  9W: 4000 K: 140 Lm/Watt
  9W: 3000 K: 133 Lm/Watt

Code	Description
82005012■	Keras Medium 9W Warm
82005013■	Keras Medium 9W Neutral

Colour Codes:
0 Colours | 1 White | 2 Titan | 3 Black | 5 Matt Alum. | 8 Metal Colours

SLING APPLIQUE

An extraordinary luminaire
for people with fascinating personality.
Designed to be the centerpiece of each room,
it emits a gentle diffuse light
thanks to its latest technological LED source.

Technical Features

- Aluminium body, painted electrostatically in selected colour.
- Steel mounting base.
- High efficient polycarbonate satin cover.
- Connection for operation with 230V/50Hz.

SLING APPLIQUE

SLING APPLIQUE SMALL

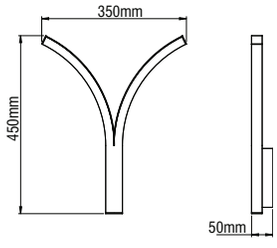

IP **40** | **LED** | **850**°C | 5 years WARRANTY | ta 25°C | Included

- Aluminium body.
- Driver 24V DC included.
- CRI: min. 80 / SDCM: 3
- Luminous Efficacy:
  9W: 4000 K: 140 Lm/Watt
  9W: 3000 K: 133 Lm/Watt

Code	Description
82005252■	Sling Applique Small 9W Warm
82005253■	Sling Applique Small 9W Neutral

SLING APPLIQUE MEDIUM

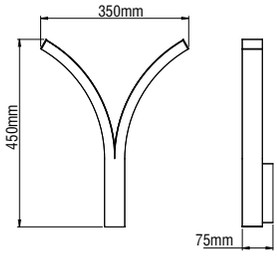

IP **40** | **LED** | **850**°C | 5 years WARRANTY | ta 25°C | Included

- Aluminium body.
- Driver 24V DC included.
- CRI: min. 80 / SDCM: 3
- Luminous Efficacy:
  18W: 4000 K: 140 Lm/Watt
  18W: 3000 K: 133 Lm/Watt

Code	Description
82005262■	Sling Applique Medium 18W Warm
82005263■	Sling Applique Medium 18W Neutral

Colour Codes:
0 Colours | 1 White | 2 Titan | 3 Black | 5 Matt Alum. | 8 Metal Colours

YPSILON APPLIQUE

An extraordinary luminaire
for people with fascinating personality.
Designed to be the centerpiece of each room,
it emits a gentle diffuse light
thanks to its latest technological LED source.

Technical Features

- Aluminium body, painted electrostatically in selected colour.
- Steel mounting base.
- High efficient polycarbonate satin cover.
- Connection for operation with 230V/50Hz.

YPSILON APPLIQUE

YPSILON APPLIQUE SMALL

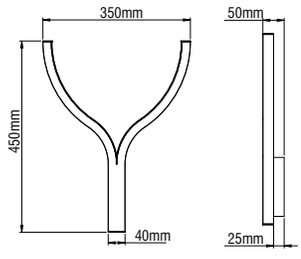

IP **40** | **LED** | **850**°C | 5 years WARRANTY | ta 25°C | Included

- Aluminium body.
- Driver 24V DC included.
- CRI: min. 80 / SDCM: 3
- Luminous Efficacy:
  12W: 4000 K: 140 Lm/Watt
  12W: 3000 K: 133 Lm/Watt

Code	Description
82005052■	Ypsilon Applique Small 12W Warm
82005053■	Ypsilon Applique Small 12W Neutral

YPSILON APPLIQUE MEDIUM

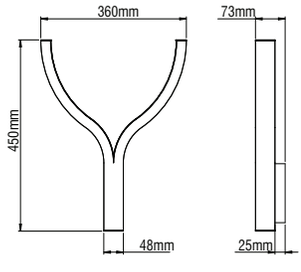

IP **40** | **LED** | **850**°C | 5 years WARRANTY | ta 25°C | Included

- Aluminium body.
- Driver 24V DC included.
- CRI: min. 80 / SDCM: 3
- Luminous Efficacy:
  24W: 4000 K: 140 Lm/Watt
  24W: 3000 K: 133 Lm/Watt

Code	Description
82005062■	Ypsilon Applique Medium 24W Warm
82005063■	Ypsilon Applique Medium 24W Neutral

Colour Codes:
0 Colours | 1 White | 2 Titan | 3 Black | 5 Matt Alum. | 8 Metal Colours

KORONIS

Surface wall mounted luminaire with led chip, ideal for a wide range of indoor applications. Available in six different shapes. It is suitable for areas where soft illumination and more architectural style is required.

Technical Features

- Aluminium body, painted electrostatically in selected colour.
- Steel mounting base.
- PMMA cover.
- Operation life: 50,000 hours with efficiency > 80% of the initial luminous flux (L80B10).
- Connection for operation with 230V/50Hz.

KORONIS

KORONIS 1

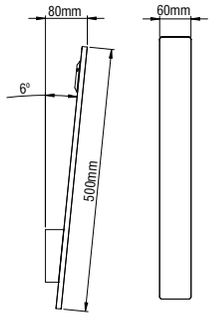

IP 40 | LED | 850°C | 5 years WARRANTY | ta 25°C

- Aluminium body.
- Satin PMMA cover.
- CRI: min. 80 / SDCM: 3
- Luminous Efficacy:
  4W: 4000 K: 122 Lm/Watt
  4W: 3000 K: 115 Lm/Watt

Code	Description
85850■	Koronis 1 1x4W Warm
85851■	Koronis 1 1x4W Neutral

KORONIS 2

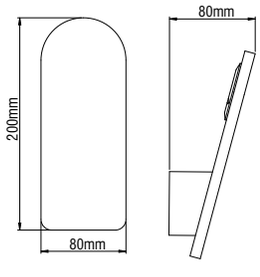

IP 40 | LED | 850°C | 5 years WARRANTY | ta 25°C

- Aluminium body.
- Satin PMMA cover.
- CRI: min. 80 / SDCM: 3
- Luminous Efficacy:
  4W: 4000 K: 122 Lm/Watt
  4W: 3000 K: 115 Lm/Watt

Code	Description
85852■	Koronis 2 1x4W Warm
85853■	Koronis 2 1x4W Neutral

KORONIS 3

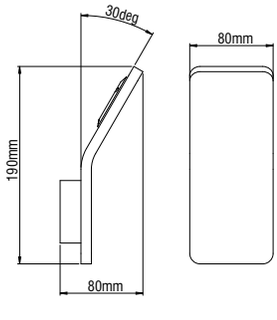

IP 40 | LED | 850°C | 5 years WARRANTY | ta 25°C

- Aluminium body.
- Satin PMMA cover.
- CRI: min. 80 / SDCM: 3
- Luminous Efficacy:
  4W: 4000 K: 122 Lm/Watt
  4W: 3000 K: 115 Lm/Watt

Code	Description
85854■	Koronis 3 1x4W Warm
85855■	Koronis 3 1x4W Neutral

KORONIS 4

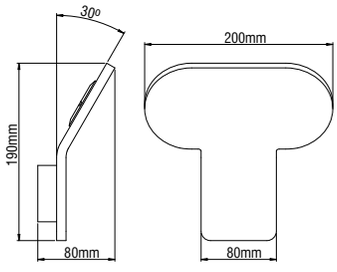

IP **40** | **LED** | **850**°C | 5 years WARRANTY | ta 25°C

- Aluminium body.
- Satin PMMA cover.
- CRI: min. 80 / SDCM: 3
- Luminous Efficacy:
  4W: 4000 K: 122 Lm/Watt
  4W: 3000 K: 115 Lm/Watt

Code	Description
85856■	Koronis 4 2x4W Warm
85857■	Koronis 4 2x4W Neutral

KORONIS 5

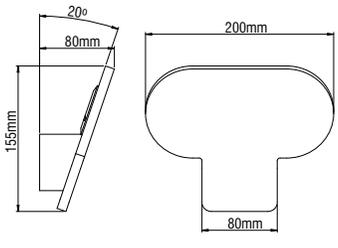

IP **40** | **LED** | **850**°C | 5 years WARRANTY | ta 25°C

- Aluminium body.
- Satin PMMA cover.
- CRI: min. 80 / SDCM: 3
- Luminous Efficacy:
  4W: 4000 K: 122 Lm/Watt
  4W: 3000 K: 115 Lm/Watt

Code	Description
85858■	Koronis 5 2x4W Warm
85859■	Koronis 5 2x4W Neutral

KORONIS 6

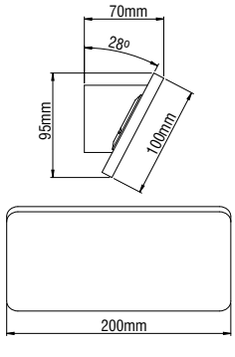

IP **40** | **LED** | **850**°C | 5 years WARRANTY | ta 25°C

- Aluminium body.
- Satin PMMA cover.
- CRI: min. 80 / SDCM: 3
- Luminous Efficacy:
  4W: 4000 K: 122 Lm/Watt
  4W: 3000 K: 115 Lm/Watt

Code	Description
85860■	Koronis 6 2x4W Warm
85861■	Koronis 6 2x4W Neutral

Colour Codes:
0 Colours | 1 White | 2 Titan | 3 Black

GEORGE S

MINI APPLIQUES

Surface wall mounted luminaire with led chip,
ideal for a wide range of indoor applications.
Available in four different shapes.
It is suitable for areas where soft illumination and more architectural style is required.

Technical Features

- Aluminium body, painted electrostatically in selected colour.
- Steel mounting base.
- PMMA cover.
- Operation life: 50,000 hours with efficiency > 80% of the initial luminous flux (L80B10).
- Connection for operation with 230V/50Hz.

GEA

IP 40 | LED | 850°C | 5 years WARRANTY | ta 25°C

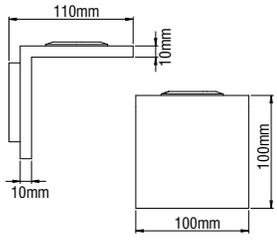

- Aluminium body.
- Satin PMMA cover.
- CRI: min. 80 / SDCM: 3
- Luminous Efficacy:
  4W: 4000 K: 122 Lm/Watt
  4W: 3000 K: 115 Lm/Watt

Code	Description
85827■	Gea 1x4W Warm
85828■	Gea 1x4W Neutral

DIONI

IP 40 | LED | 850°C | 5 years WARRANTY | ta 25°C

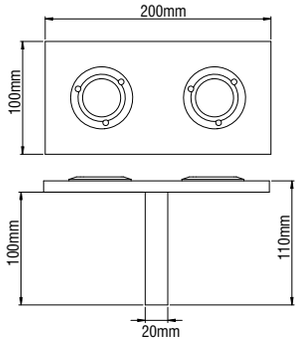

- Aluminium body.
- Satin PMMA cover.
- CRI: min. 80 / SDCM: 3
- Luminous Efficacy:
  4W: 4000 K: 122 Lm/Watt
  4W: 3000 K: 115 Lm/Watt

Code	Description
85829■	Dioni 2x4W Warm
85830■	Dioni 2x4W Neutral

FIVI

IP 40 | LED | 850°C | 5 years WARRANTY | ta 25°C

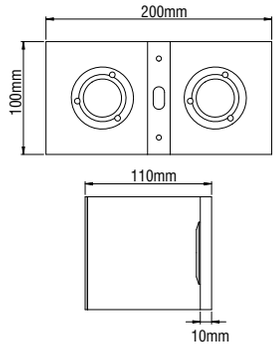

- Aluminium body.
- Satin PMMA cover.
- CRI: min. 80 / SDCM: 3
- Luminous Efficacy:
  4W: 4000 K: 122 Lm/Watt
  4W: 3000 K: 115 Lm/Watt

Code	Description
85831■	Fivi 2x4W Warm
85832■	Fivi 2x4W Neutral

IRO

IP 40 | LED | 850°C | 5 years WARRANTY | ta 25°C

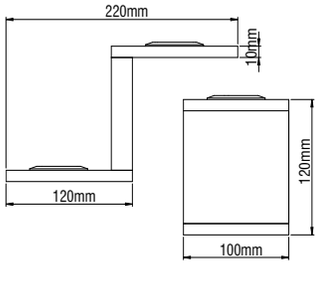

- Aluminium body.
- Satin PMMA cover.
- CRI: min. 80 / SDCM: 3
- Luminous Efficacy:
  4W: 4000 K: 122 Lm/Watt
  4W: 3000 K: 115 Lm/Watt

Code	Description
85833■	Iro 2x4W Warm
85834■	Iro 2x4W Neutral

Colour Codes:
0 Colours | 1 White | 2 Titan | 3 Black

MINI BEAM

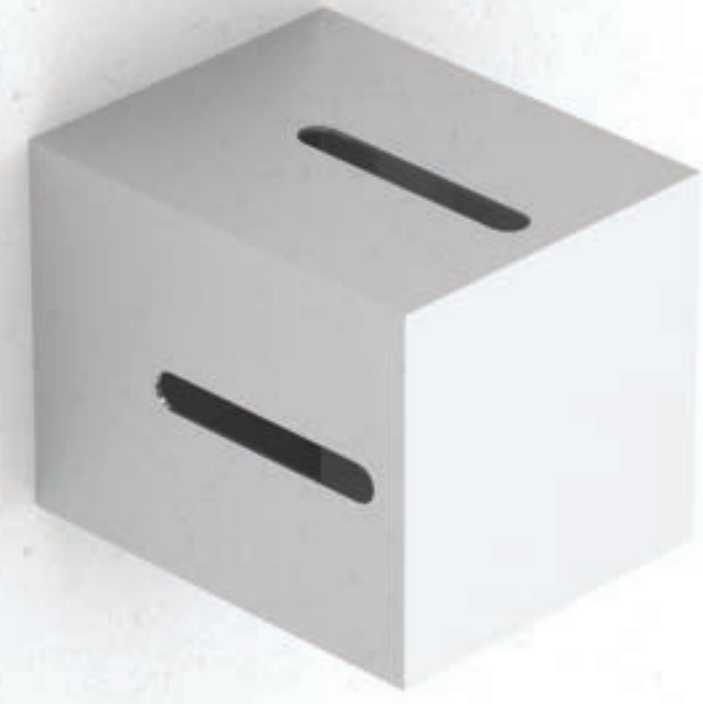

Surface wall mounted luminaire with G9 Led lamps,
ideal for a wide range of indoor applications.
Available with two to four-way light distribution and with different beam angles.

Technical Features

- Aluminium body, painted electrostatically in selected colour.
- Steel lampholder - mounting base.
- Tempered glass for wide beams.
- Easy - no tools - body mounting.
- Wide variety of beams.

Upon request
Special beam editions.

MINI BEAM

IP 20 | LED Lamp | G9 LED

- For G9 Led lamp.
- Aluminium body.
- Tempered protection glass for:
  SPOT MINI BEAM - TWO WAY / Narrow / Wide Beam,
  SPOT MINI BEAM - THREE WAY / 2 Narrow Beam - 1 Wide Beam,
  SPOT MINI BEAM - TWO WAY / Carre - Wide Beam and
  SPOT MINI BEAM - TWO WAY / Carre - Narrow Beam editions.

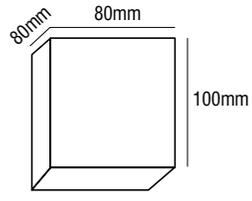

Description	Kg
Mini Beam G9	0,300

SPOT MINI BEAM - TWO WAY / Narrow Beam
Code: 85703

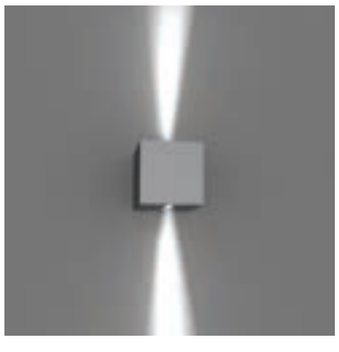

SPOT MINI BEAM - THREE WAY/ Narrow Beam
Code: 85704

SPOT MINI BEAM - FOUR WAY CROSS / Narrow Beam
Code: 85705

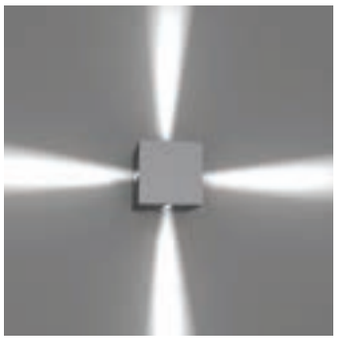

SPOT MINI BEAM - TWO WAY / Narrow / Wide Beam
Code: 85706

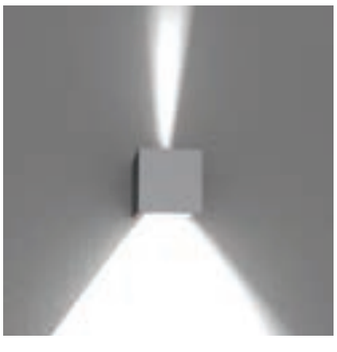

SPOT MINI BEAM - FOUR WAY / Narrow Beam
Code: 85707

SPOT MINI BEAM - THREE WAY / 2 Narrow Beam - 1 Wide Beam
Code: 85708

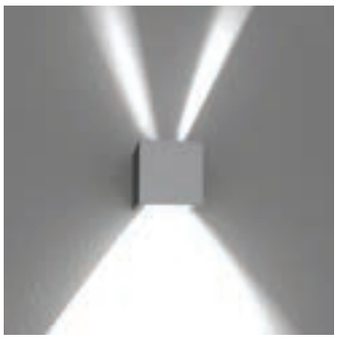

SPOT MINI BEAM - TWO WAY / Carre - Wide Beam
Code: 85709

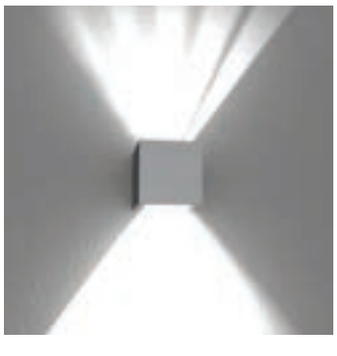

SPOT MINI BEAM - TWO WAY / Carre - Narrow Beam
Code: 85710

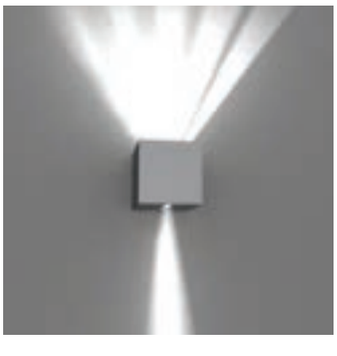

Colour Codes:
0 Colours | 1 White | 2 Titan | 3 Black | 4 Chrome

BEAM 1/2 IP40

Surface wall mounted luminaire with LED lamp G9,
ideal for a wide range of indoor applications.
Available with one or two-way light distribution and with different beam angles.

Technical Features

- Aluminium body, painted electrostatically in selected colour.
- Die-cast aluminium lampholder - mounting base.
- Tempered protection glass.
- Beam-angle configuration diaphragm made of aluminium.

Upon request
Special beam editions.

Versions

BEAM 1 - ONE WAY
40°

BEAM 2 - ONE WAY
100°

BEAM 1 - TWO WAY
40° / 100°

BEAM 2 - TWO WAY
100° / 100°

BEAM 1 - TWO WAY
40° / 40°

BEAM 1/2 IP40

BEAM 1 - ONE WAY

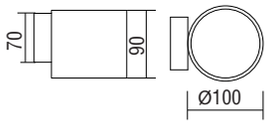

IP 40 | 850°C | G9 LED | LED Lamp

- For QT 14/G9 lamp.
- Aluminium body.

Code	Description	Kg
85717■	BEAM1 - ONE WAY G9 40°	0,540
85718■	BEAM1 - ONE WAY G9 100°	0,540

BEAM 1 - TWO WAY

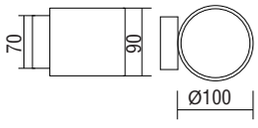

IP 40 | 850°C | G9 LED | LED Lamp

- For QT 14/G9 lamp.
- Aluminium body.

Code	Description	Kg
85711■	BEAM1 - TWO WAY G9 40° / 100°	0,540
85712■	BEAM1 - TWO WAY G9 100° / 100°	0,540
85713■	BEAM1 - TWO WAY G9 40° / 40°	0,540

BEAM 2 - ONE WAY

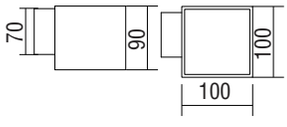

IP 40 | 850°C | G9 LED | LED Lamp

- For QT 14/G9 lamp.
- Aluminium body.

Code	Description	Kg
85719■	BEAM2 - ONE WAY G9 40°	0,625
85720■	BEAM2 - ONE WAY G9 100°	0,625

BEAM 2 - TWO WAY

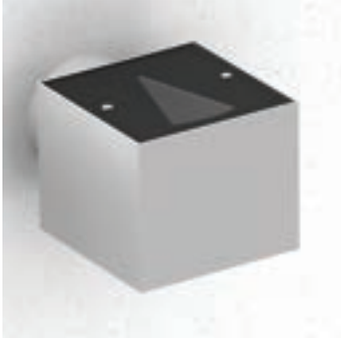

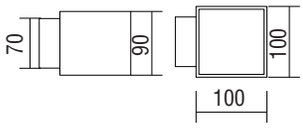

IP 40 | 850°C | G9 LED | LED Lamp

- For QT 14/G9 lamp.
- Aluminium body.

Code	Description	Kg
85714■	BEAM2 - TWO WAY G9 40° / 100°	0,625
85715■	BEAM2 - TWO WAY G9 100° / 100°	0,625
85716■	BEAM2 - TWO WAY G9 40° / 40°	0,625

Colour Codes:
0 Colours | 1 White | 2 Titan | 3 Black | 4 Chrome

BEAM 20

Surface wall mounted luminaire with LED lamp G9, ideal for a wide range of indoor applications.
Available with one or two-way light distribution and with different beam angles.

Technical Features

- Aluminium body, painted electrostatically in selected colour.
- Aluminium lampholder - mounting base.
- Tempered protection glass.
- Beam-angle configuration diaphragm made of aluminium.
- Easy - no tools - body mounting.

Upon request
Special beam editions.

Versions

BEAM 20 - ONE WAY
40°

BEAM 20 - ONE WAY
100°

BEAM 20 - TWO WAY
40° / 100°

BEAM 20 - TWO WAY
100° / 100°

BEAM 20 - TWO WAY
40° / 40°

BEAM 20

BEAM 20 - ONE WAY G9

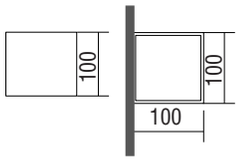

IP **40** | **850**°C | G9 LED | LED Lamp

- For QT 14/G9 lamp.
- Aluminium body.

Code	Description	Kg
85793■	BEAM 20 - ONE WAY G9 40°	0,520
85794■	BEAM 20 - ONE WAY G9 100°	0,520

BEAM 20 - TWO WAY G9

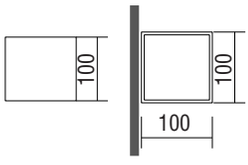

IP **40** | **850**°C | G9 LED | LED Lamp

- For QT 14/G9 lamp.
- Aluminium body.

Code	Description	Kg
85790■	BEAM 20 - TWO WAY G9 40° / 100°	0,520
85791■	BEAM 20 - TWO WAY G9 100° / 100°	0,520
85792■	BEAM 20 - TWO WAY G9 40° / 40°	0,520

Colour Codes:
0 Colours 1 White 2 Titan 3 Black 4 Chrome

BEAM 21

Wall mounted luminaire with two LED GU10 PAR16 lamps, ideal for a wide range of indoor applications. Available with one light distribution.

Technical Features

- Aluminium body, painted electrostatically in selected colour.
- Aluminium mounting base.
- Aluminium movable heads.

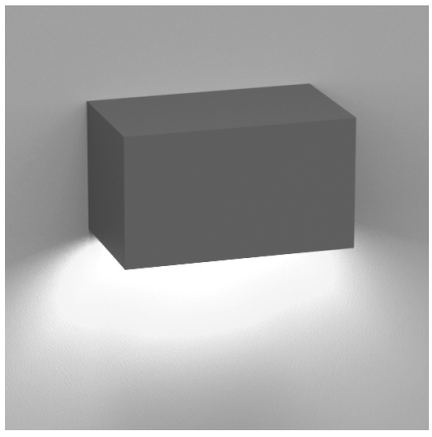

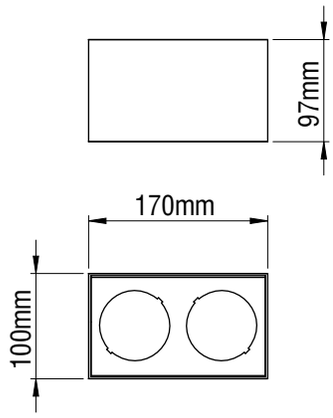

CE | F | IP 40 | LED Lamp | 850°C | PAR 16 LED GU10

- For LED GU10/PAR16 lamp.
- Aluminium body.
- Movable aluminium heads.

Code	Description	Kg
85738■	BEAM 21 - Applique 2xGU10/PAR16	0,520

Colour Codes:
0 Colours | 1 White | 2 Titan | 3 Black | 4 Chrome | 5 matt Alum.

ERIS 1 APPLIQUE

ERIS is surface wall mounted luminaire with GU10 LED lamps, ideal for a wide range of indoor applications.
Available with one or two-way light distribution.

Technical Features

- Aluminium body, painted electrostatically in selected colour.
- Steel mounting base.
- Connection for operation with 230V/50Hz.

ERIS 1 APPLIQUE

ERIS 1 APPLIQUE One Way

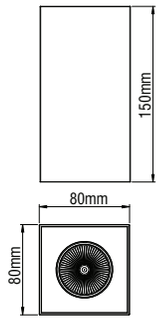

IP **20** | **850**°C | PAR 16 LED GU10

LED Lamp

- Version for PAR 16/GU10.
- Aluminium body.
- Steel mounting base.
- 230V/50Hz.

Code	Description	Kg
88470■	ERIS 1 APPLIQUE One Way PAR 16/GU10	0,400

ERIS 1 APPLIQUE Two Way

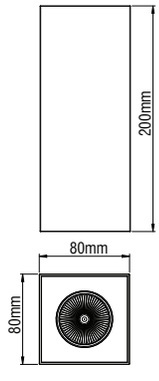

IP **20** | **850**°C | PAR 16 LED GU10

LED Lamp

- Version for PAR 16/GU10.
- Aluminium body.
- Steel mounting base.
- 230V/50Hz.

Code	Description	Kg
88471■	ERIS 1 APPLIQUE Two Way 2xPAR 16/GU10	0,400

Colour Codes:
0 Colours | 1 White | 2 Titan | 3 Black

GALATIA

Surface wall mounted luminaire,
ideal for a wide range of indoor applications.
Available in two different sizes.
It is suitable for areas where soft illumination and more architectural style is required.

Technical Features

- Aluminium body, painted electrostatically in selected colour.
- Movable 90º degrees cover.
- Connection for operation with 230V/50Hz.

GALATIA

GALATIA B

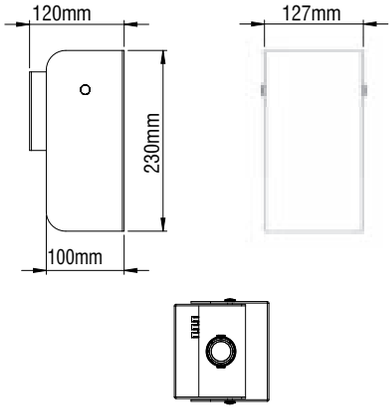

IP 20 | 90° | CFL TUBE E27

- For TC-DSE / E27 lamp.
- Aluminium body.

Code	Description
85841■	GALATIA B 1x max. 25W E27

GALATIA S

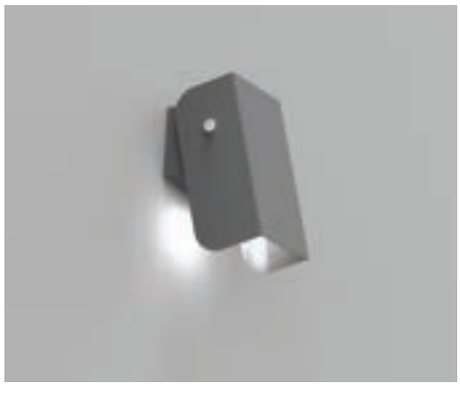

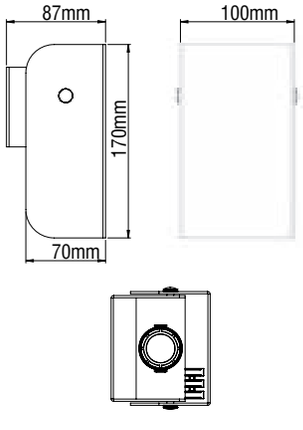

IP 20 | 90° | CFL TUBE E27

- For TC-DSE / E27 lamp.
- Aluminium body.

Code	Description
85840■	GALATIA S 1x max. 20W E27

Colour Codes:
0 Colours 1 White 2 Titan 3 Black

LITO

LITO is an minimal applique with LED CHIP.
It is ideal for hotels, reception halls, bars, restaurants, houses etc.

Technical Features

- Body from aluminium painted electrostatically in selected colour or plated.
- Steel mounting base.
- Pure light without IR/UV radiation.
- Operation life: 50,000 hours with efficiency > 80% of the initial luminous flux (L80B10).
- Connection for operation with 230V/50Hz.

Upon request:
Available with highest colour rendering index (CRI)

LITO

LITO

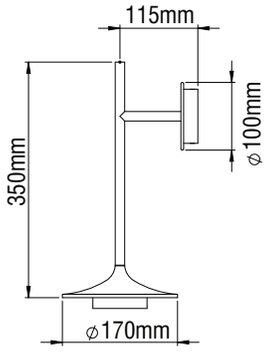

CE | F | ⏚ | IP 20 | LED | 5 years WARRANTY | ta 25°C | 850°C

- Aluminium body.
- Opal PMMA diffuser.
- 230V/50Hz.
- Dimmer Phase Cut.
- CRI: min. 80 / SDCM: 3
- Luminous Efficacy:
  116 Lm/W at 4000 K
  110 Lm/W at 3000 K

Code	Description	Kg
85926■	LITO LED 8W Warm	0,550
85927■	LITO LED 8W Neutral	0,550

LITO BIG

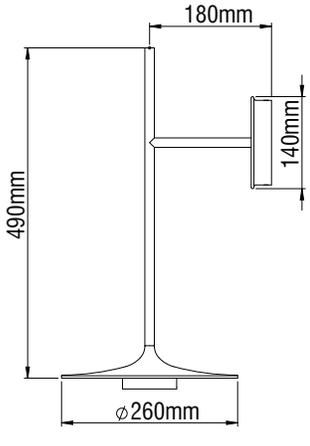

CE | F | ⏚ | IP 20 | LED | 5 years WARRANTY | ta 25°C | 850°C

- Aluminium body.
- Opal PMMA diffuser.
- 230V/50Hz.
- Dimmer Phase Cut.
- CRI: min. 80 / SDCM: 3
- Luminous Efficacy:
  116 Lm/W at 4000 K
  110 Lm/W at 3000 K

Code	Description	Kg
85928■	LITO BIG LED 8W Warm	0,720
85929■	LITO BIG LED 8W Neutral	0,720

Colour Codes:
0 Colours | 1 White | 2 Titan | 3 Black | 4 Chrome | 5 matt Alum.

KIRKI

WALL LIGHTING INTERIOR

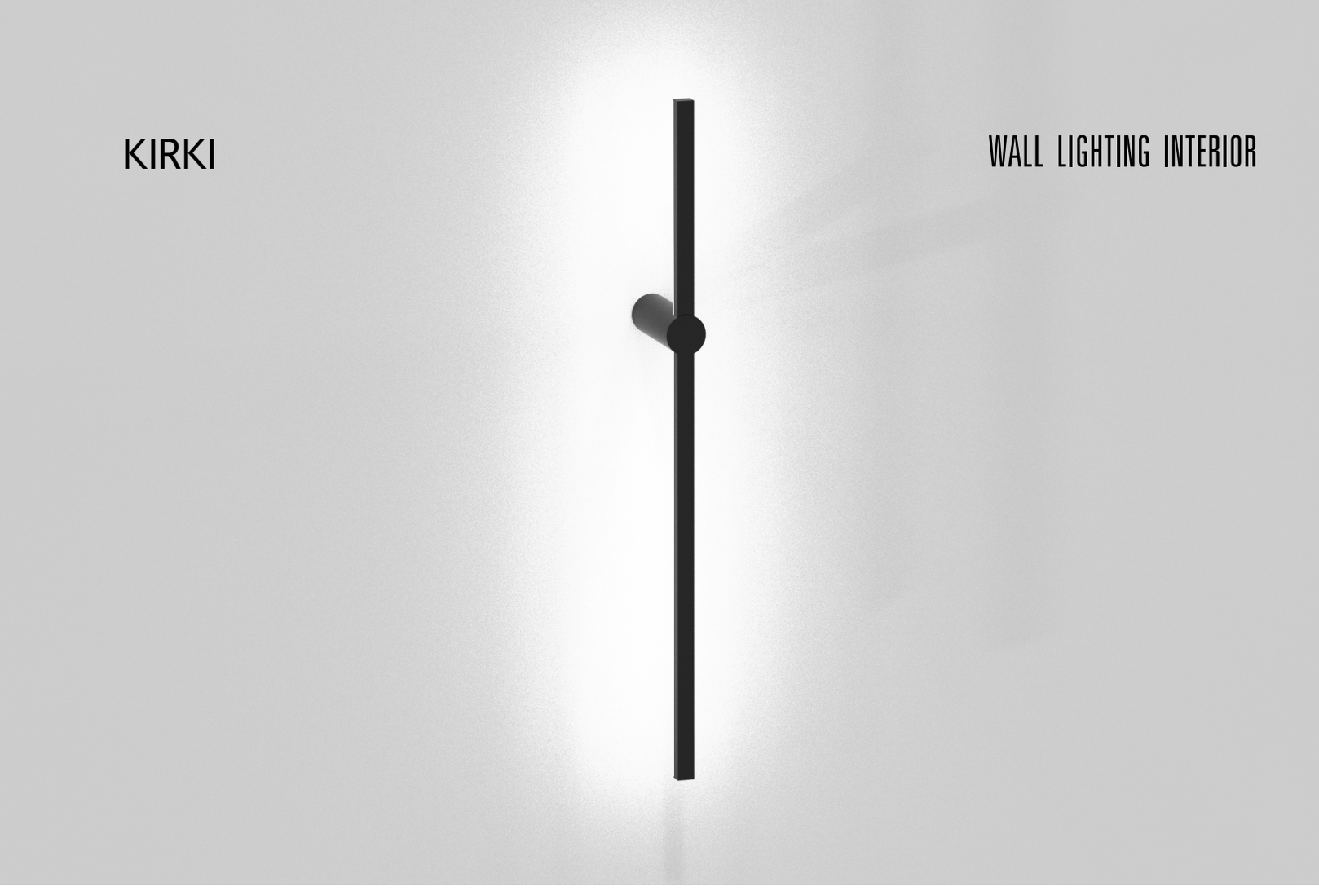

KIRKI is an absolutely stunning and impressive LED applique, suitable for areas where, having an eyecatcher luminaire, is the main request.

Technical Features

- Aluminium body, painted electrostatically in selected colour.
- Aluminium mounting base.
- High efficient polycarbonate satin cover.
- Connection for operation with 230V/50Hz.

CE | F | IP **40** | **LED** | **850**°C | years 5 WARRANTY | ta 25°C | Included

- Aluminium body, painted electrostatically in selected colour.
- Driver 24V DC included.
- CRI: min. 80 / SDCM: 3
- Luminous Efficacy:
  140 Lm/Watt at 4000 K
  133 Lm/Watt at 3000 K

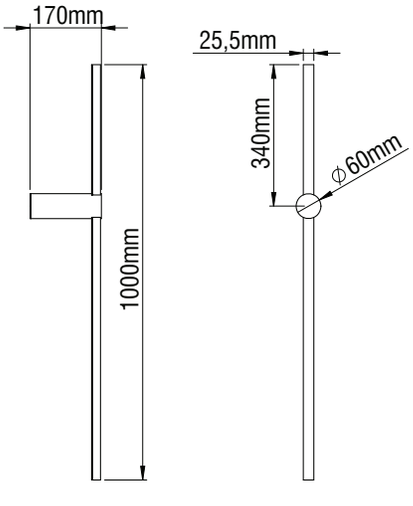

Code	Description
85158■	Kirki 15W Warm
85159■	Kirki 15W Neutral

Colour Codes:
0 Colours 1 White 2 Titan 3 Black

EKALI APPLIQUE

Surface wall mounted luminaire,
ideal for a wide range of indoor applications.
Available in two versions.
It is suitable for areas where soft illumination and more architectural style is required.

Technical Features

- Aluminium body.
- GU10 lampholders.
- One or two way light output.

EKALI APPLIQUE

EKALI APPLIQUE Two Way

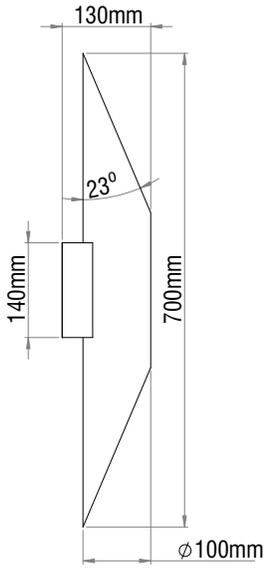

IP 20 | 850°C | 0° | 0°

PAR 16 LED GU10 | LED Lamp

- Version for PAR 16/GU10.
- Aluminium body.
- 230V/50Hz.

Code	Description	Kg
85874■	Ekali Two Way Par16 / GU10	0,450

EKALI APPLIQUE One Way

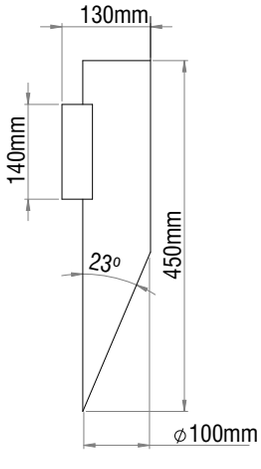

IP 20 | 850°C | 0° | 0°

PAR 16 LED GU10 | LED Lamp

- Version for PAR 16/GU10.
- Aluminium body.
- 230V/50Hz.

Code	Description	Kg
85875■	Ekali One Way Par16 / GU10	0,400

Colour Codes:
0 Colours | 1 White | 2 Titan | 3 Black | 5 Matt Alum. | 8 Metal Colours

NANO

NANO is an minimal applique with LED source.
It is ideal for hotels, reception halls, bars, restaurants, houses etc.

Technical Features

- Body from aluminium profile painted electrostatically in selected colour or plated.
- Mounting base from aluminium, painted electrostatically in selected colour or plated.
- Pure light without IR/UV radiation.
- Operation life: 50,000 hours with efficiency > 80% of the initial luminous flux (L80B10).
- Connection for operation with 230V/50Hz.

Upon request:
Available with highest colour rendering index (CRI)

SPOT

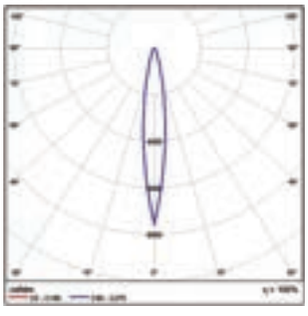

MEDIUM

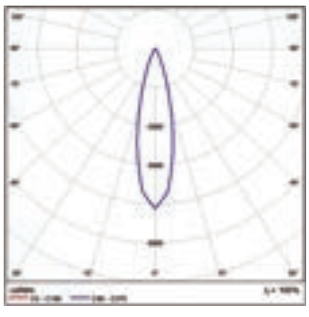

WIDE

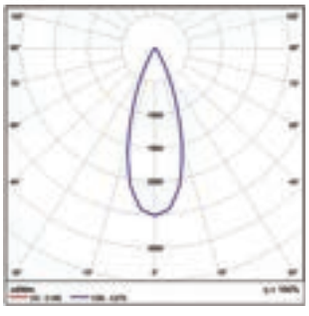

NANO 3 - APPLIQUE

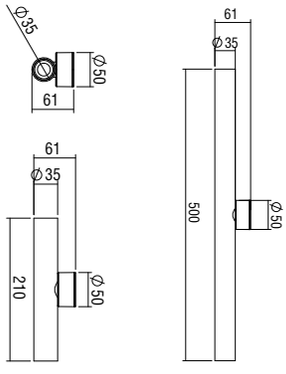

IP 40 | LED | 850°C | 5 years WARRANTY | ta 25°C

Included

- Applique version for LED CHIP.
- Aluminium body.
- 230V/50Hz.
- 3W power consumption driven at 350mA.
- CRI: min. 80 / SDCM: 3
- Luminous Efficacy:
  3W: 4000 K: 164 Lm/Watt
  3W: 3000 K: 154 Lm/Watt

Code	Description	Kg
88052	NANO 3 LED APPLIQUE 2x3W 21cm	0,600
88053	NANO 3 LED APPLIQUE 2x3W 50cm	0,850

NANO 3 SQ - APPLIQUE

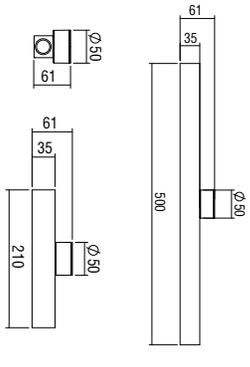

IP 40 | LED | 850°C | 5 years WARRANTY | ta 25°C

Included

- Applique version for LED CHIP.
- Aluminium body.
- 230V/50Hz.
- 3W power consumption driven at 350mA.
- CRI: min. 80 / SDCM: 3
- Luminous Efficacy:
  3W: 4000 K: 164 Lm/Watt
  3W: 3000 K: 154 Lm/Watt

Code	Description	Kg
88072	NANO 3 SQ LED APPLIQUE 2x3W 21cm	0,600
88073	NANO 3 SQ LED APPLIQUE 2x3W 50cm	0,850

Colour Codes:
0 Colours | 1 White | 2 Titan | 3 Black | 4 Chrome | 5 matt Alum.

ELECTRA

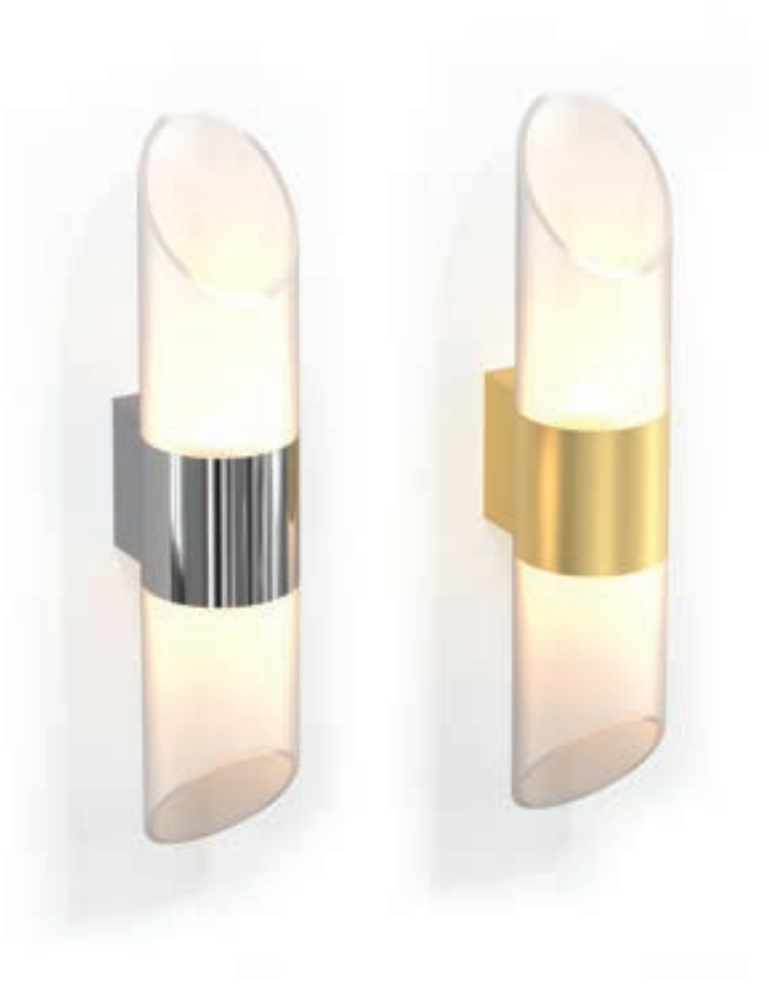

ELECTRA is an minimal applique with LED lamp GU10 or LED CHIP. It is ideal for hotels, reception halls, bars, restaurants, houses etc.

Technical Features

- Body from aluminium profile painted electrostatically in selected colour or plated.
- Mounting base from aluminium, painted electrostatically in selected colour or plated.

For LED Version

- Pure light without IR/UV radiation.
- Operation life: 50,000 hours with efficiency > 80% of the initial luminous flux (L80B10).
- Connection for operation with 230V/50Hz.

Upon request:

Available with highest colour rendering index (CRI)

ELECTRA

ELECTRA 1

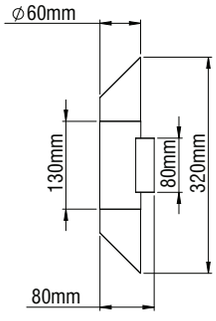

IP 20 | LED | 5 years WARRANTY | ta 25°C | 850°C

- Aluminium body.
- Opal PMMA diffuser.
- 230V/50Hz.
- Dimmer Phase Cut.
- CRI: min. 80 / SDCM: 3
- Luminous Efficacy:
  122 Lm/W at 4000 K
  115 Lm/W at 3000 K

Code	Description	Kg
85930■	ELECTRA 1 LED Up/Down 4W+4W Warm	0,800
85931■	ELECTRA 1 LED Up/Down 4W+4W Neutral	0,800

ELECTRA 2

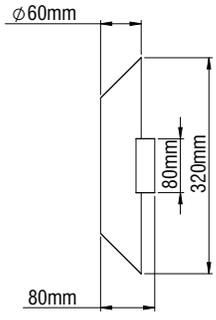

IP 20 | LED | 5 years WARRANTY | ta 25°C | 850°C

PAR 16 LED GU10

- Version for PAR 16 LED GU10 or LED CHIP.
- Aluminium body.
- 230V/50Hz.
- Dimmer Phase Cut (for LED CHIP version).
- CRI: min. 80 / SDCM: 3
- Luminous Efficacy:
  122 Lm/W at 4000 K
  115 Lm/W at 3000 K

Code	Description	Kg
85935■	ELECTRA 2 Up/Down 2xGU10	0,700
85933■	ELECTRA 2 LED Up/Down 4W+4W Warm	0,800
85934■	ELECTRA 2 LED Up/Down 4W+4W Neutral	0,800

Colour Codes:
0 Colours | 1 White | 2 Titan | 3 Black | 4 Chrome | 5 matt Alum.

PENELOPE

PENELOPE is an minimal applique with LED CHIP.
It is ideal for hotels, reception halls, bars, restaurants, houses etc.

Technical Features

- Body from aluminium painted electrostatically in selected colour or plated.
- Mounting base from aluminium, painted electrostatically in selected colour or plated.
- Pure light without IR/UV radiation.
- Operation life: 50,000 hours with efficiency > 80% of the initial luminous flux (L80B10).
- Connection for operation with 230V/50Hz.

Upon request:
Available with highest colour rendering index (CRI)

CE | F | IP **40** | LED | 5 years WARRANTY | ta 25ºC | **850**ºC

- Aluminium body.
- Satin PMMA cover.
- 230V/50Hz.
- Dimmer Phase Cut.
- CRI: min. 80 / SDCM: 3
- Luminous Efficacy:
  122 Lm/W at 4000 K
  115 Lm/W at 3000 K

Code	Description	Kg
85150■	PENELOPE 4W+4W Warm	0,800
85151■	PENELOPE 4W+4W Neutral	0,800

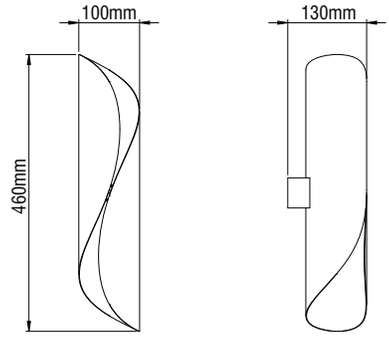

Colour Codes:
0 Colours | 1 White | 2 Titan | 3 Black | 4 Chrome | 5 matt Alum.

DANAI

DANAI is surface wall mounted luminaire with LED source, ideal for a wide range of indoor applications.

Technical Features

- Aluminium body, painted electrostatically in selected colour.
- Steel mounting base.
- Connection for operation with 230V/50Hz.

DANAI

DANAI 1

IP **20** | **850**°C | LED | 5 years WARRANTY | ta 25°C | Included

- Aluminium body.
- Steel mounting base.
- 2W power consumption driven at 700mA.
- 230V/50Hz.
- CRI: min. 80 / SDCM: 3
- Luminous Efficacy:
  164 Lm/W at 4000 K
  154 Lm/W at 3000 K

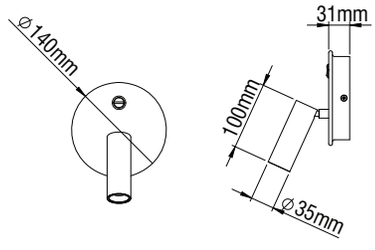

Code	Description	Kg
85916■	DANAI 1 2W Warm	0,350
85917■	DANAI 1 2W Neutral	0,350

DANAI 2

IP **20** | **850**°C | LED | 5 years WARRANTY | ta 25°C | Included

- Aluminium body.
- Steel mounting base.
- 2W power consumption driven at 700mA.
- 230V/50Hz.
- CRI: min. 80 / SDCM: 3
- Luminous Efficacy:
  164 Lm/W at 4000 K
  154 Lm/W at 3000 K

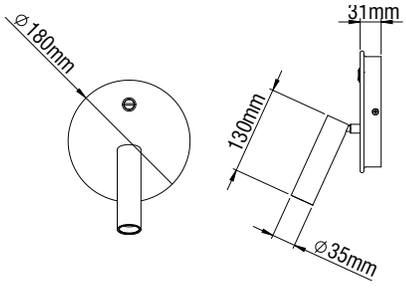

Code	Description	Kg
85918■	DANAI 2 2W Warm	0,400
85919■	DANAI 2 2W Neutral	0,400

Colour Codes:
0 Colours | 1 White | 2 Titan | 3 Black

PANDORA

PANDORA is surface wall mounted luminaire with LED source, ideal for a wide range of indoor applications.

Technical Features

- Aluminium body, painted electrostatically in selected colour.
- Aluminium mounting base.
- Connection for operation with 230V/50Hz.

PANDORA

PANDORA 1

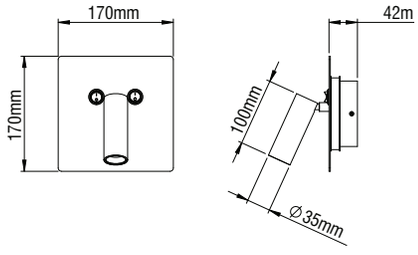

IP 20 | 850°C | LED

years 5 WARRANTY | ta 25°C | Included

- Aluminium body.
- Aluminium mounting base.
- 230V/50Hz.
- CRI: min. 80 / SDCM: 3
- 2W+2W Up/ Down and 2W LED spot.
- Luminous Efficacy (for Up/ Down):
  140 Lm/W at 4000 K
  132 Lm/W at 3000 K
- Luminous Efficacy (for LED spot):
  164 Lm/W at 4000 K
  154 Lm/W at 3000 K

Code	Description	Kg
85994	PANDORA 1 4W+2W Warm	0,400
85995	PANDORA 1 4W+2W Neutral	0,400

PANDORA 2

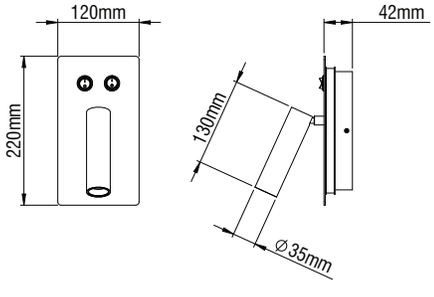

IP 20 | 850°C | LED

years 5 WARRANTY | ta 25°C | Included

- Aluminium body.
- Aluminium mounting base.
- 230V/50Hz.
- CRI: min. 80 / SDCM: 3
- 2W+2W Up/ Down and 2W LED spot.
- Luminous Efficacy (for Up/ Down):
  140 Lm/W at 4000 K
  132 Lm/W at 3000 K
- Luminous Efficacy (for LED spot):
  164 Lm/W at 4000 K
  154 Lm/W at 3000 K

Code	Description	Kg
85996	PANDORA 2 4W+2W Warm	0,400
85997	PANDORA 2 4W+2W Neutral	0,400

PANDORA 3

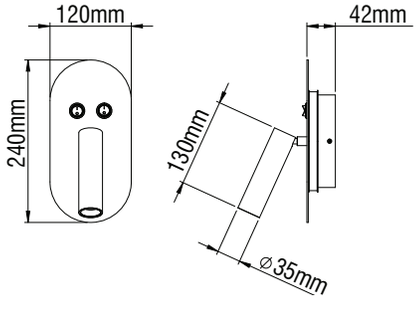

IP 20 | 850°C | LED

years 5 WARRANTY | ta 25°C | Included

- Aluminium body.
- Aluminium mounting base.
- 230V/50Hz.
- CRI: min. 80 / SDCM: 3
- 2W+2W Up/ Down and 2W LED spot.
- Luminous Efficacy (for Up/ Down):
  140 Lm/W at 4000 K
  132 Lm/W at 3000 K
- Luminous Efficacy (for LED spot):
  164 Lm/W at 4000 K
  154 Lm/W at 3000 K

Code	Description	Kg
85998	PANDORA 3 4W+2W Warm	0,400
85999	PANDORA 3 4W+2W Neutral	0,400

Colour Codes:
0 Colours | 1 White | 2 Titan | 3 Black

DAFNI

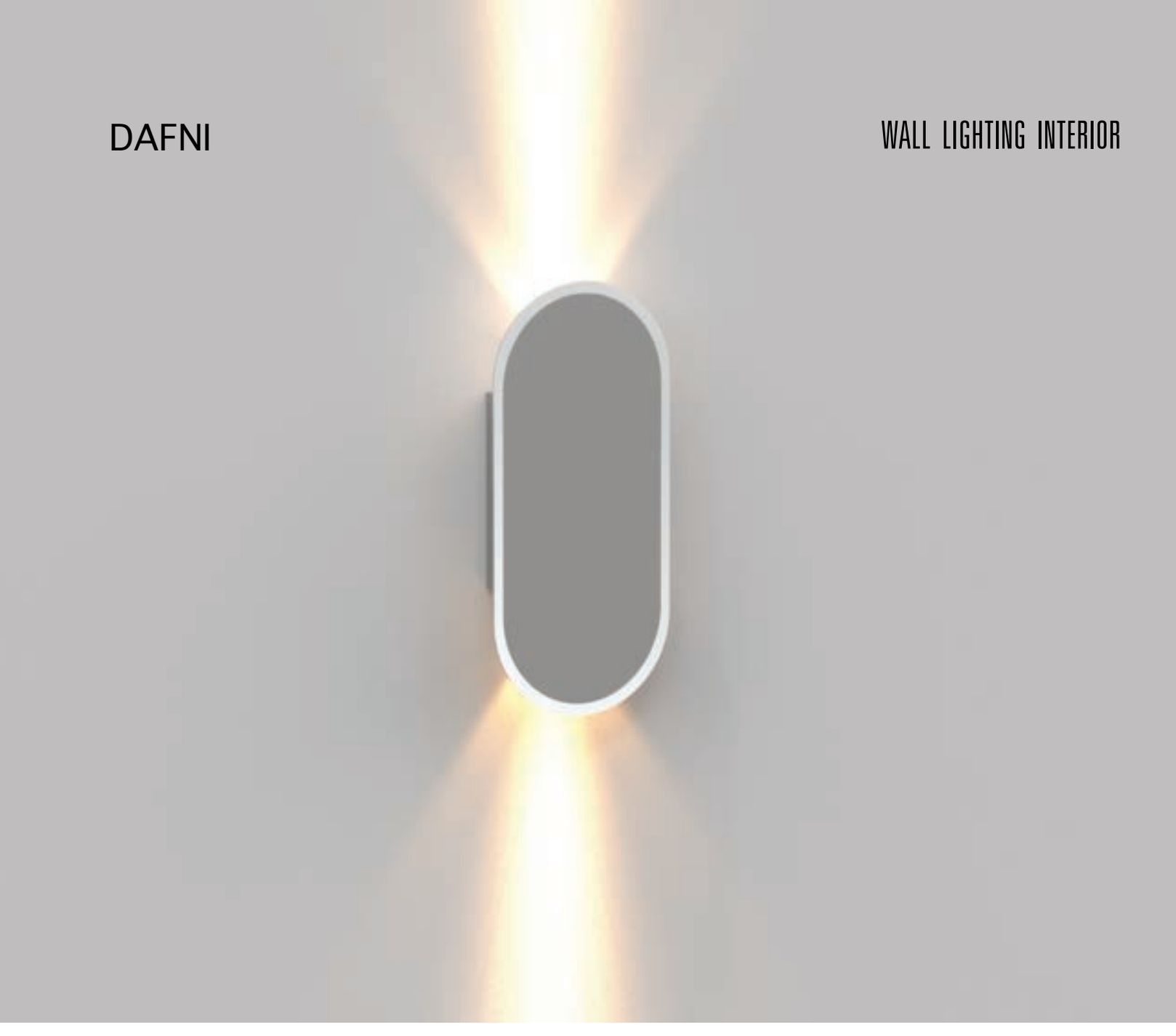

DAFNI is surface wall mounted luminaire with LED source, ideal for a wide range of indoor applications.

Technical Features

- Aluminium body, painted electrostatically in selected colour.
- Aluminium mounting base.
- Connection for operation with 230V/50Hz.

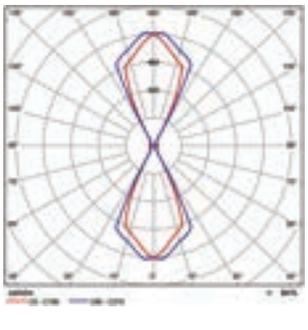

DAFNI

DAFNI 1

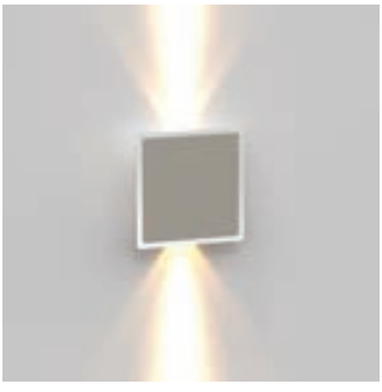

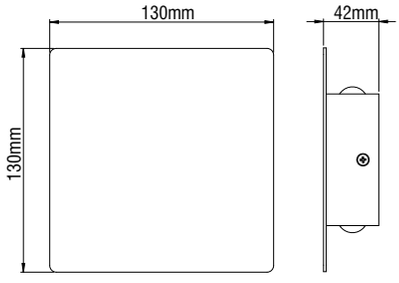

IP 20 | 850°C | LED

years 5 WARRANTY | ta 25°C | Included

- Aluminium body.
- Aluminium mounting base.
- 230V/50Hz.
- CRI: min. 80 / SDCM: 3
- 2W+2W Up/ Down.
- Luminous Efficacy:
  140 Lm/W at 4000 K
  132 Lm/W at 3000 K

Code	Description	Kg
88472■	DAFNI 1 2W+2W Warm	0,380
88473■	DAFNI 1 2W+2W Neutral	0,380

DAFNI 2

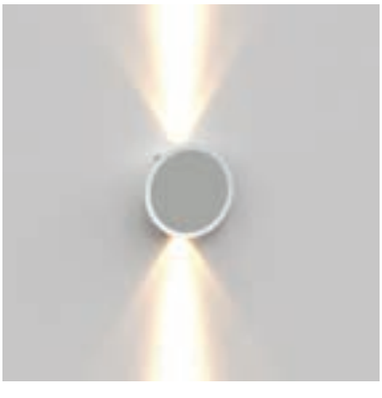

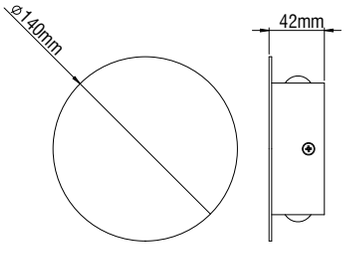

IP 20 | 850°C | LED

years 5 WARRANTY | ta 25°C | Included

- Aluminium body.
- Aluminium mounting base.
- 230V/50Hz.
- CRI: min. 80 / SDCM: 3
- 2W+2W Up/ Down.
- Luminous Efficacy:
  140 Lm/W at 4000 K
  132 Lm/W at 3000 K

Code	Description	Kg
88474■	DAFNI 2 2W+2W Warm	0,320
88475■	DAFNI 2 2W+2W Neutral	0,320

DAFNI 3

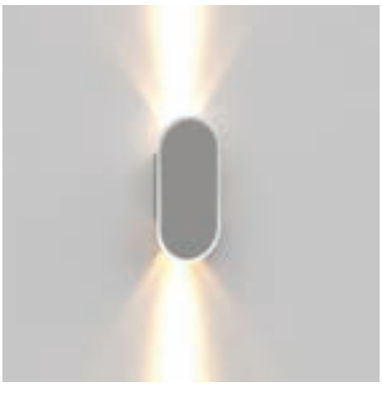

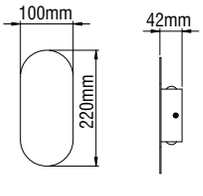

IP 20 | 850°C | LED

years 5 WARRANTY | ta 25°C | Included

- Aluminium body.
- Aluminium mounting base.
- 230V/50Hz.
- CRI: min. 80 / SDCM: 3
- 2W+2W Up/ Down.
- Luminous Efficacy:
  140 Lm/W at 4000 K
  132 Lm/W at 3000 K

Code	Description	Kg
88476■	DAFNI 3 2W+2W Warm	0,350
88477■	DAFNI 3 2W+2W Neutral	0,350

Colour Codes:
0 Colours | 1 White | 2 Titan | 3 Black

NEST

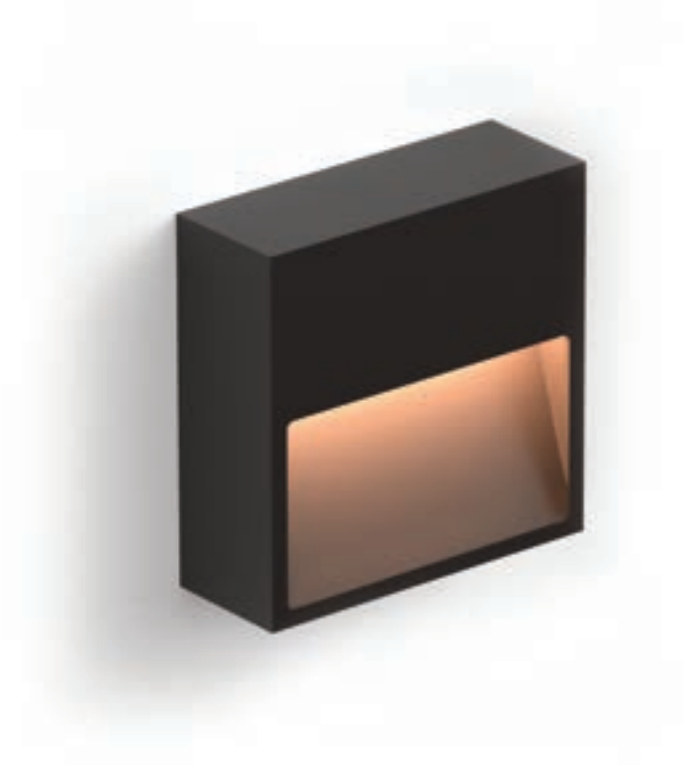

NEST is an minimal applique with LED source.
It is ideal for hotels, reception halls, bars, restaurants, houses etc.

Technical Features

- Aluminium body, painted electrostatically in selected colour.
- PMMA cover.
- Pure light without IR/UV radiation.
- Operation life: 50,000 hours with efficiency > 80% of the initial luminous flux (L80B10).
- Connection for operation on 230V/50Hz.

CE | F | IP **40** | **850**°C | LED | 5 years WARRANTY | ta 25°C | Included

- Aluminium body, painted electrostatically in selected colour.
- Driver 24V DC included.
- CRI: min. 80 / SDCM: 3
- Luminous Efficacy:
  140Lm/W at 4000 K
  133Lm/W at 3000 K

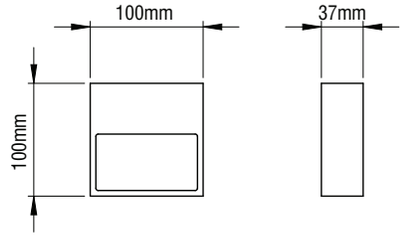

Code	Description	Kg
85788■	NEST 4W Warm	0,300
85789■	NEST 4W Neutral	0,300

Colour Codes:
0 Colours 1 White 2 Titan 3 Black

Technical Features

- Aluminium or plastic body.
- High efficient polycarbonate satin cover.
- Pure light without IR/UV radiation.
- Operation life: 50,000 hours with efficiency > 80% of the initial luminous flux (L80B10).
- Connection for operation on 230V/50Hz.

ROOM 1

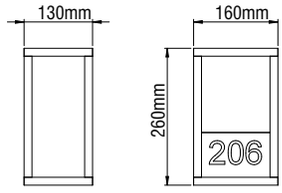

IP 20 | LED | 5 years WARRANTY | ta 25ºC | Included

- Aluminium body.
- High efficient diffuser in opal PMMA.
- CRI: min. 80 / SDCM: 3
- Luminous Efficacy:
  140 Lm/W at 4000 K
  133 Lm/W at 3000 K

Code	Description
85884■	Room 1 6W Warm
85885■	Room 1 6W Neutral

ROOM 2

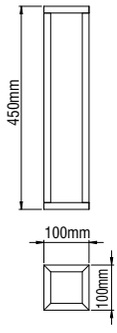

IP 20 | LED | 5 years WARRANTY | ta 25ºC | Included

- Aluminium body.
- High efficient diffuser in opal PMMA.
- CRI: min. 80 / SDCM: 3
- Luminous Efficacy:
  140 Lm/W at 4000 K
  133 Lm/W at 3000 K

Code	Description
85886■	Room 2 12W Warm
85887■	Room 2 12W Neutral

ROOM 3

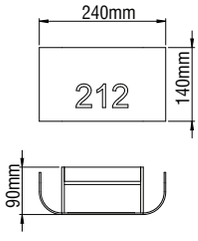

IP 20 | LED | 5 years WARRANTY | ta 25ºC | Included

- Plastic body.
- Luminous Efficacy:
  85Lm/W at 4000 K CRI: min. 80
  80Lm/W at 3000 K CRI: min. 80

Code	Description
85888■	Room 3 4W Warm
85889■	Room 3 4W Neutral

ROOM 4

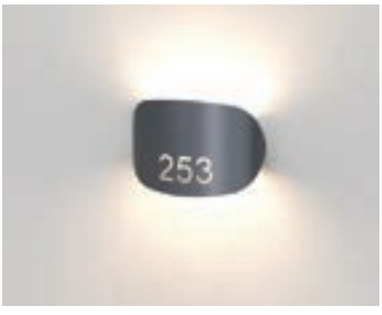

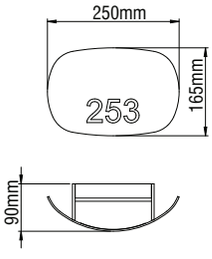

IP 20 | LED | 5 years WARRANTY | ta 25ºC | Included

- Plastic body.
- Luminous Efficacy:
  85Lm/W at 4000 K CRI: min. 80
  80Lm/W at 3000 K CRI: min. 80

Code	Description
85894■	Room 4 4W Warm
85895■	Room 4 4W Neutral

ROOM 5

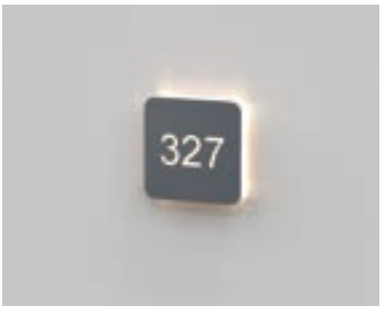

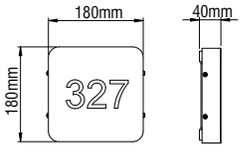

IP 20 | LED | 5 years WARRANTY | ta 25ºC | Included

- Plastic body.
- Luminous Efficacy:
  100 Lm/W at 4000 K CRI: min. 80
  95 Lm/W at 3000 K CRI: min. 80

Code	Description
85890■	Room 5 4W Warm
85891■	Room 5 4W Neutral

ROOM 6

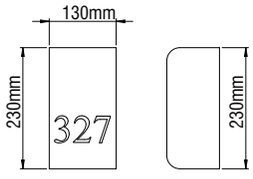

CE | F | IP 20 | LED Lamp | ta 25°C

- Aluminium body.
- Lampholder E14.

Code	Description
85892■	Room 6 E14

ROOM 7

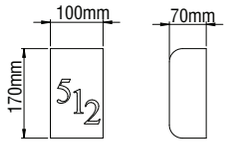

CE | F | IP 20 | LED Lamp | ta 25°C

- Aluminium body.
- Lampholder E14.

Code	Description
85893■	Room 7 E14

ROOM 8

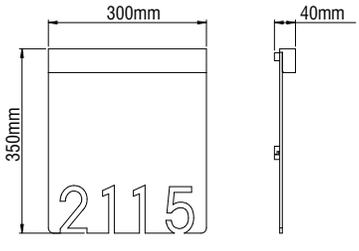

CE | F | IP 65 | LED | years 5 WARRANTY | ta 25°C | Included

- Aluminium body.
- Luminous Efficacy:
  85Lm/W at 4000 K CRI: min. 80
  80Lm/W at 3000 K CRI: min. 80

Code	Description
85896■	Room 8 1,5W Warm
85897■	Room 8 1,5W Neutral

ROOM 9

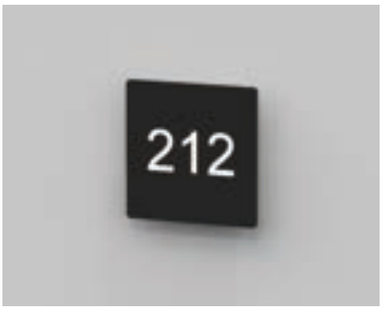

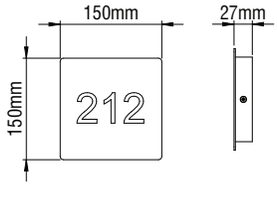

CE | F | IP 20 | LED | years 5 WARRANTY | ta 25°C | Included

- Aluminium body.
- Luminous Efficacy:
  140 Lm/W at 4000 K CRI: min. 80
  133 Lm/W at 3000 K CRI: min. 80

Code	Description
85912■	Room 9 8W Warm
85913■	Room 9 8W Neutral

ROOM 10

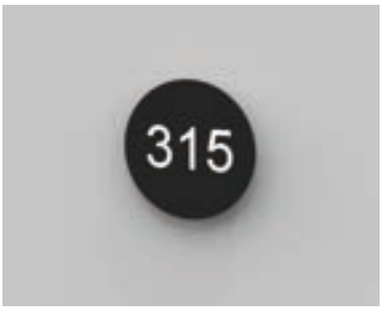

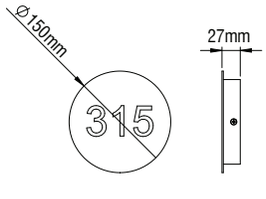

CE | F | IP 20 | LED | years 5 WARRANTY | ta 25°C | Included

- Aluminium body.
- Luminous Efficacy:
  140 Lm/W at 4000 K CRI: min. 80
  133 Lm/W at 3000 K CRI: min. 80

Code	Description
85936■	Room 10 8W Warm
85937■	Room 10 8W Neutral

ROOM 11

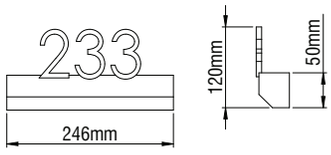

CE | F | IP **20** | LED | 5 years WARRANTY | ta 25°C | Included

- Plastic body.
- Luminous Efficacy:
  100 Lm/W at 4000 K CRI: min. 80
  95 Lm/W at 3000 K CRI: min. 80

Code	Description
85914■	Room 11 4W Warm
85915■	Room 11 4W Neutral

ROOM 12

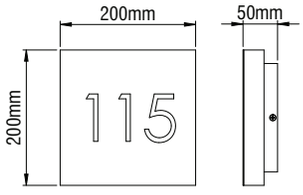

CE | F | IP **20** | LED | 5 years WARRANTY | ta 25°C | Included

- Plastic body.
- Luminous Efficacy:
  100 Lm/W at 4000 K CRI: min. 80
  95 Lm/W at 3000 K CRI: min. 80

Code	Description
85938■	Room 12 10W Warm
85939■	Room 12 10W Neutral

ROOM 13

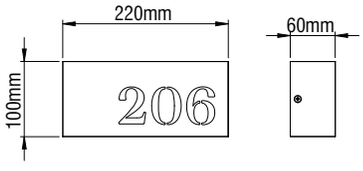

CE | F | IP **54** | LED | 5 years WARRANTY | ta 25°C | Included

- Aluminium body.
- Luminous Efficacy:
  140 Lm/W at 4000 K CRI: min. 80
  133 Lm/W at 3000 K CRI: min. 80

Code	Description
85803■	Room 13 8W Warm
85804■	Room 13 8W Neutral

Colour Codes:
0 Colours | 1 White | 2 Titan | 3 Black

NATALIA

NATALIA is surface wall mounted luminaire with LED source, ideal for a wide range of indoor applications.

Technical Features

- Aluminium body, painted electrostatically in selected colour.
- Steel mounting base.
- Connection for operation with 230V/50Hz.

CE | F | IP **20** | **850**°C | **LED** | years 5 WARRANTY | ta 25°C | Included

- Aluminium body.
- Steel mounting base.
- 230V/50Hz.
- CRI: min. 80 / SDCM: 3
- 3W+3W Up/ Down and 2W LED spot.
- Luminous Efficacy (for Up/ Down):
  140 Lm/W at 4000 K
  132 Lm/W at 3000 K
- Luminous Efficacy (for LED spot):
  164 Lm/W at 4000 K
  154 Lm/W at 3000 K

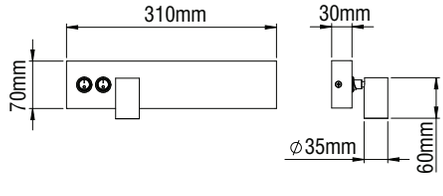

Code	Description	Kg
85910■■■	NATALIA APPLIQUE LED 6W+2W	0,700

LED COLOUR CODES:	BEAM CODES:	Colour Codes:
2 Warm 3 Neutral	01 spot 02 medium 03 wide	0 Colours 1 White 2 Titan 3 Black

IOKASTI

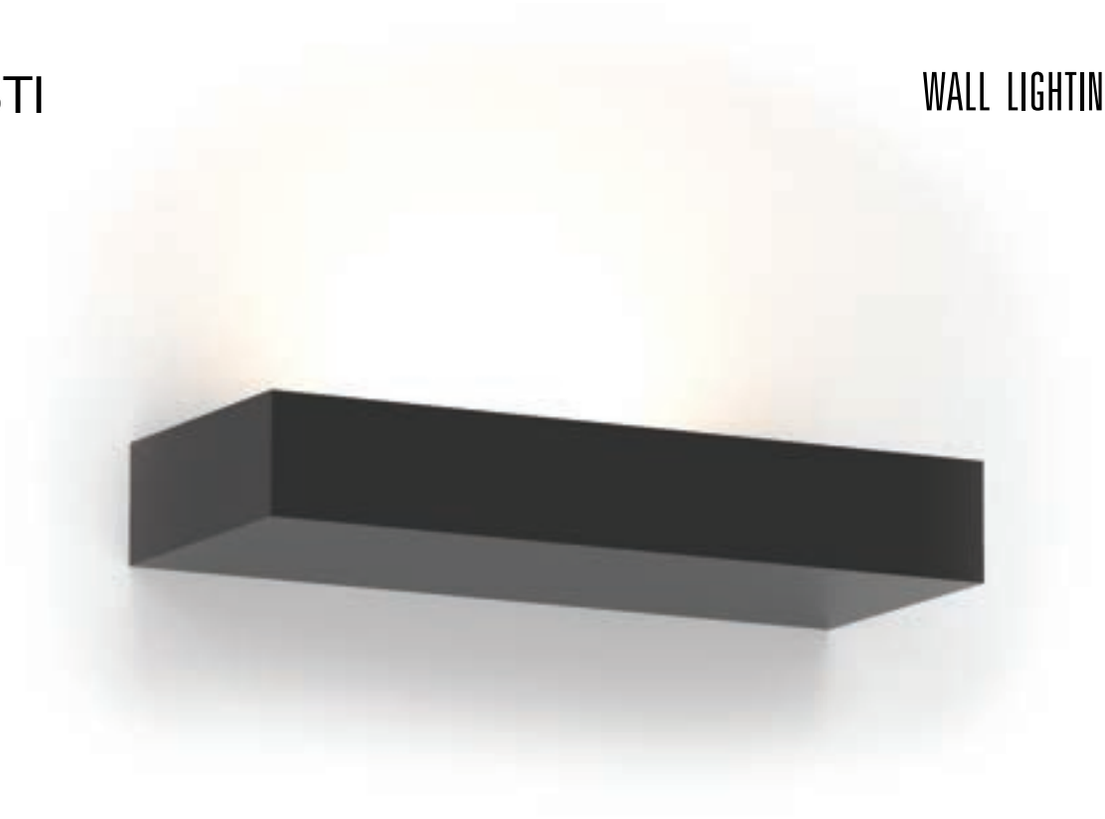

IOKASTI is surface wall mounted luminaire with LED source, ideal for a wide range of indoor applications.

Technical Features

- Aluminium body, painted electrostatically in selected colour.
- Steel mounting base.
- Connection for operation with 230V/50Hz.

IOKASTI

IOKASTI 1

IP 20 | 850ºC | LED | 5 years WARRANTY | ta 25ºC | Included

- Aluminium body.
- PMMA cover.
- 230V/50Hz.
- CRI: min. 80 / SDCM: 3
- 8W at 350mA.
- Luminous Efficacy:
  201 Lm/W at 4000 K
  189 Lm/W at 3000 K

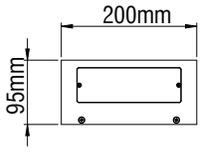

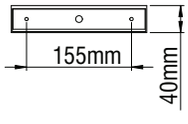

Code	Description	Kg
85970■	IOKASTI 1 APPLIQUE LED 8W Warm	0,600
85971■	IOKASTI 1 APPLIQUE LED 8W Neutral	0,600

IOKASTI 2

IP 20 | 850ºC | LED | 5 years WARRANTY | ta 25ºC | Included

- Aluminium body.
- PMMA cover.
- 230V/50Hz.
- CRI: min. 80 / SDCM: 3
- 12W at 350mA.
- Luminous Efficacy:
  201 Lm/W at 4000 K
  189 Lm/W at 3000 K

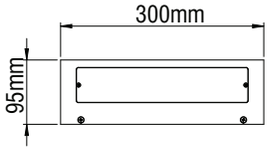

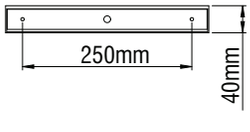

Code	Description	Kg
85972■	IOKASTI 2 APPLIQUE LED 12W Warm	0,900
85973■	IOKASTI 2 APPLIQUE LED 12W Neutral	0,900

Colour Codes:
0 Colours | 1 White | 2 Titan | 3 Black

Surface wall mounted luminaire with LED strip,
ideal for a wide range of indoor applications.
Available in three different lengths.
It is suitable for areas where soft, mostly indirect, illumination is required.

Technical Features

- Aluminium body, painted electrostatically in selected colour.
- Steel mounting base.
- PMMA cover.

CE | F | IP **40** | **LED** | 5 years WARRANTY | ta 25ºC | Included | **850**ºC

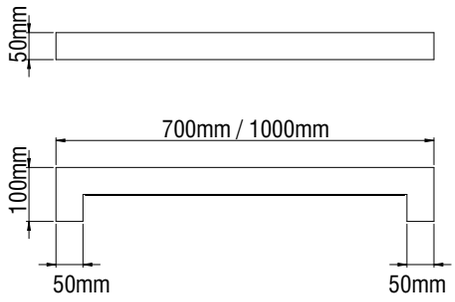

- Aluminium body, painted electrostatically in selected colour.
- PMMA cover.
- Driver 24V DC included.
- CRI: min. 80 / SDCM: 3
- Luminous Efficacy:
  140Lm/W at 4000 K
  133Lm/W at 3000 K

Code	Description	Kg
85960■	IVI LED 70cm 8W Warm	0,800
85961■	IVI LED 70cm 8W Neutral	0,800
85962■	IVI LED 70cm 13W Warm	0,800
85963■	IVI LED 70cm 13W Neutral	0,800
85964■	IVI LED 100cm 11W Warm	1,200
85967■	IVI LED 100cm 11W Neutral	1,200
85968■	IVI LED 100cm 16W Warm	1,200
85969■	IVI LED 100cm 16W Neutral	1,200

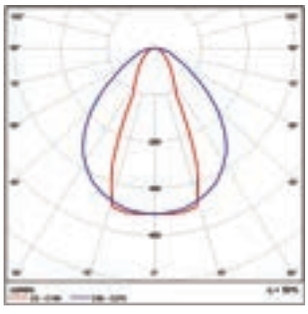

Colour Codes:
0 Colours 1 White 2 Titan 3 Black

MORFI APPLIQUE

This Applique combines the architectural style with the efficiency. It produces perfect lighting conditions without annoying reflections and that is why it can be used from entrance areas to offices.
It escapes the restrictions of the T16 lamp by using LED lighting points that can have any spacing pitch and this gives the light line enormous flexibility.
The visual benefit: The continuous-row system is illuminated absolutely uniformly from beginning to end, is economically efficient, is maintenance-free and it has long service life.

Technical Features

- Housing from aluminium profile, painted electrostatically in selected colour.
- PMMA cover.
- Pure light without IR/UV radiation.
- Efficient thermal management.
- Operation life: 50,000 hours with efficiency > 80% of the initial luminous flux (L80B10).
- Connection for operation on 230V-50/60Hz.

Upon request:
- Available with highest colour rendering index (CRI).
- At special dimensions.

- Aluminium body, painted electrostatically in selected colour.
- PMMA cover.
- Driver 24V DC included.
- CRI: min. 80 / SDCM: 3
- Luminous Efficacy:
  140Lm/W at 4000 K
  133Lm/W at 3000 K

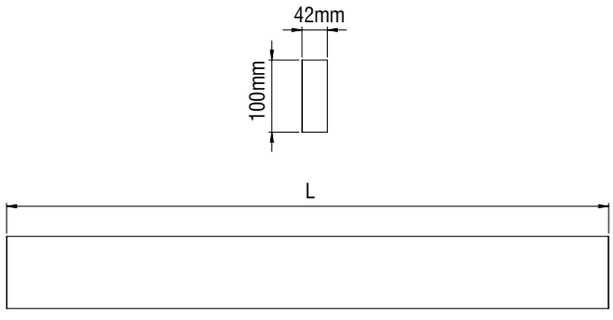

Code	Description	L	Kg
8200707■■	Morfi Applique Up/ Down 15W+15W	1000	1,200
8200708■■	Morfi Applique Up/ Down 23W+23W	1500	2,000

For dimmer version add letter **"D"** at the end of product code.

Led Colour:	Colour Codes:
2 Warm 3 Neutral	0 Colours 1 White 2 Titan 3 Black

HIGH/ LOW/ HIGH-LOW APPLIQUE

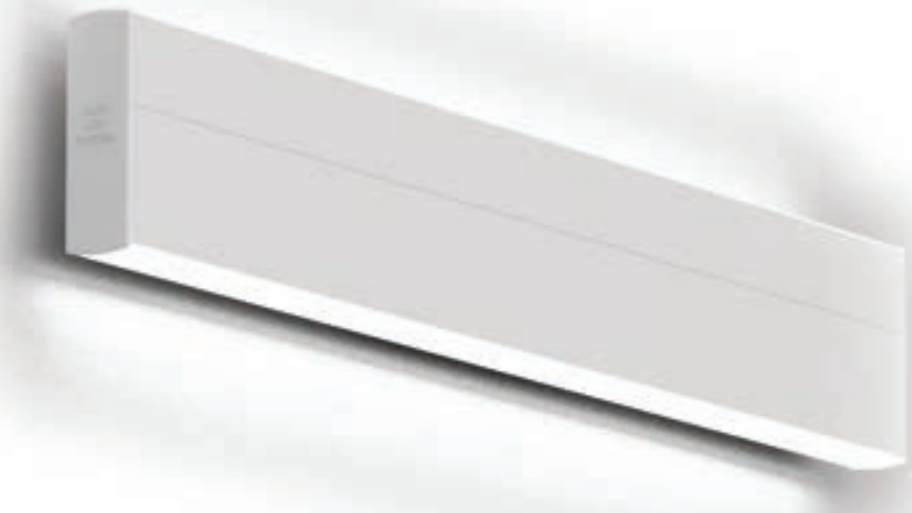

This Applique combines the architectural style with the efficiency. It produces perfect lighting conditions without annoying reflections and that is why it can be used from entrance areas to offices.
It escapes the restrictions of the T16 lamp by using LED lighting points that can have any spacing pitch and this gives the light line enormous flexibility.
The visual benefit: The continuous-row system is illuminated absolutely uniformly from beginning to end, is economically efficient, is maintenance-free and it has long service life.

Technical Features

- Housing from aluminium profile, painted electrostatically in selected colour.
- Removable plastic heads.
- High efficient diffuser in opal PMMA or anaglyph edition.
- Flow recuperator in white colour.
- Pure light without IR/UV radiation.
- Efficient thermal management.
- Operation life: 50,000 hours with efficiency > 80% of the initial luminous flux (L80B10).
- Connection for operation on 230V-50/60Hz.

Upon request:
- Available with highest colour rendering index (CRI).
- Connection for emergency lighting system, for one or three hours.

HIGH/ LOW/ HIGH-LOW APPLIQUE

HIGH APPLIQUE

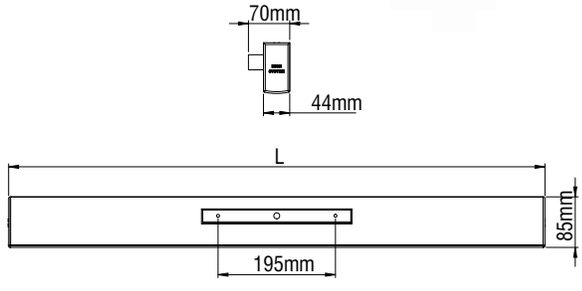

IP **40** | **LED** | 5 years WARRANTY | ta 25°C | Included

- Aluminium body.
- Removable plastic heads.
- High efficient diffuser in opal PMMA.
- Flow recuperator in white colour.
- CRI: min. 80 / SDCM: 3
- Luminous Efficacy:
  201 Lm/Watt at 4000K 350mA
  189 Lm/Watt at 3000K 350mA

Code	Description	L	Kg
96183■	High Applique Led 24W Neutral	860	2,100
96184■	High Applique Led 32W Neutral	1140	2,500
96185■	High Applique Led 40W Neutral	1420	3,200
96186■	High Applique Led 24W Warm	860	2,100
96187■	High Applique Led 32W Warm	1140	2,500
96188■	High Applique Led 40W Warm	1420	3,200

For dimmer version add letter **"D"** at the end of product code.

HIGH SURFACE APPLIQUE

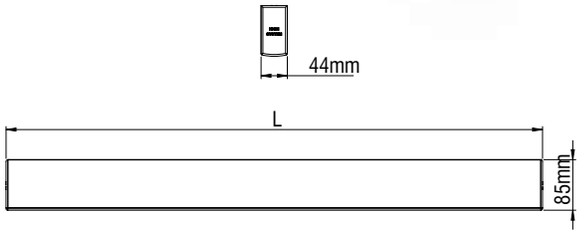

IP **40** | **LED** | 5 years WARRANTY | ta 25°C | Included

- Aluminium body.
- Removable plastic heads.
- High efficient diffuser in opal PMMA.
- Flow recuperator in white colour.
- CRI: min. 80 / SDCM: 3
- Luminous Efficacy:
  201 Lm/Watt at 4000K 350mA
  189 Lm/Watt at 3000K 350mA

Code	Description	L	Kg
96195■	High Surface Applique Led 16W Neutral	580	1,700
96189■	High Surface Applique Led 24W Neutral	860	2,100
96190■	High Surface Applique Led 32W Neutral	1140	2,500
96191■	High Surface Applique Led 40W Neutral	1420	3,200
96196■	High Surface Applique Led 16W Warm	580	1,700
96192■	High Surface Applique Led 24W Warm	860	2,100
96193■	High Surface Applique Led 32W Warm	1140	2,500
96194■	High Surface Applique Led 40W Warm	1420	3,200

For dimmer version add letter **"D"** at the end of product code.

HIGH/ LOW/ HIGH-LOW APPLIQUE

LOW APPLIQUE

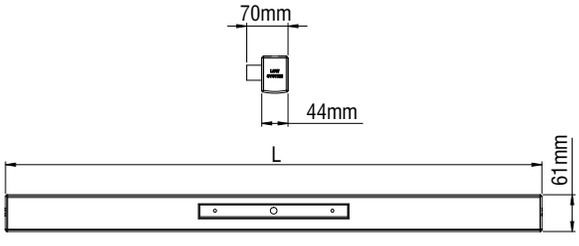

IP 40 | LED | 5 years WARRANTY | ta 25°C | Included

- Aluminium body.
- Removable plastic heads.
- High efficient diffuser in opal PMMA.
- Flow recuperator in white colour.
- CRI: min. 80 / SDCM: 3
- Luminous Efficacy:
  201 Lm/Watt at 4000K 350mA
  189 Lm/Watt at 3000K 350mA

Code	Description	L	Kg
97583■	Low Applique Led 24W Neutral	860	2,000
97584■	Low Applique Led 32W Neutral	1140	2,400
97585■	Low Applique Led 40W Neutral	1420	3,000
97586■	Low Applique Led 24W Warm	860	2,000
97587■	Low Applique Led 32W Warm	1140	2,400
97588■	Low Applique Led 40W Warm	1420	3,000

For dimmer version add letter "**D**" at the end of product code.

LOW SURFACE APPLIQUE

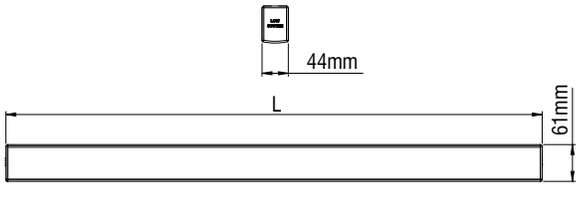

IP 40 | LED | 5 years WARRANTY | ta 25°C | Included

- Aluminium body.
- Removable plastic heads.
- High efficient diffuser in opal PMMA.
- Flow recuperator in white colour.
- CRI: min. 80 / SDCM: 3
- Luminous Efficacy:
  201 Lm/Watt at 4000K 350mA
  189 Lm/Watt at 3000K 350mA

Code	Description	L	Kg
97595■	Low Surface Applique Led 16W Neutral	580	1,600
97589■	Low Surface Applique Led 24W Neutral	860	2,000
97590■	Low Surface Applique Led 32W Neutral	1140	2,400
97591■	Low Surface Applique Led 40W Neutral	1420	3,000
97596■	Low Surface Applique Led 16W Warm	580	1,600
97592■	Low Surface Applique Led 24W Warm	860	2,000
97593■	Low Surface Applique Led 32W Warm	1140	2,400
97594■	Low Surface Applique Led 40W Warm	1420	3,000

For dimmer version add letter "**D**" at the end of product code.

HIGH/ LOW/ HIGH-LOW APPLIQUE

HIGH - LOW UP/ DOWN APPLIQUE

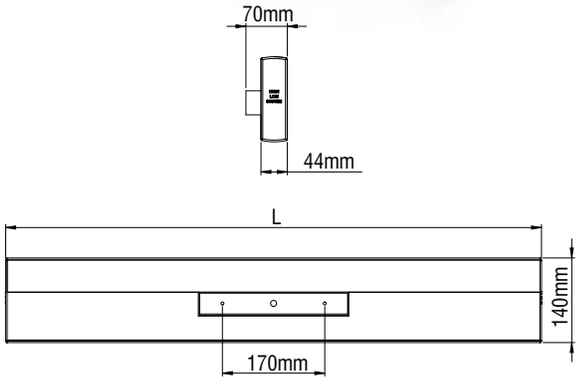

IP 40 | LED | 5 years WARRANTY | ta 25°C | Included

- Aluminium body.
- Removable plastic heads.
- High efficient diffuser in opal PMMA.
- Flow recuperator in white colour.
- CRI: min. 80 / SDCM: 3
- Luminous Efficacy:
  201 Lm/Watt at 4000K 350mA
  189 Lm/Watt at 3000K 350mA

Code	Description	L	Kg
98685■	High Low Up /Down Applique Led 24W+24W Neutral	860	3,500
98686■	High Low Up /Down Applique Led 32W+32W Neutral	1140	3,900
98687■	High Low Up /Down Applique Led 40W+40W Neutral	1420	4,700
98688■	High Low Up /Down Applique Led 24W+24W Warm	860	3,500
98689■	High Low Up /Down Applique Led 32W+32W Warm	1140	3,900
98690■	High Low Up /Down Applique Led 40W+40W Warm	1420	4,700

For dimmer version add letter **"D"** at the end of product code.

HIGH- LOW UP/ DOWN SURFACE APPLIQUE

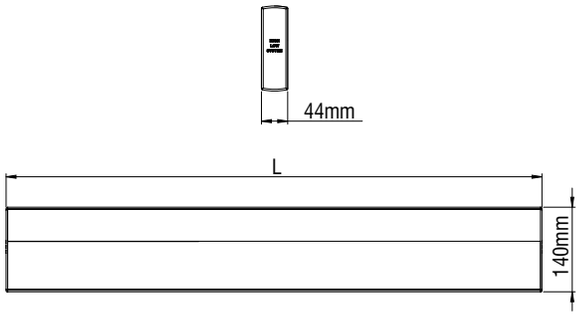

IP 40 | LED | 5 years WARRANTY | ta 25°C | Included

- Aluminium body.
- Removable plastic heads.
- High efficient diffuser in opal PMMA.
- Flow recuperator in white colour.
- CRI: min. 80 / SDCM: 3
- Luminous Efficacy:
  201 Lm/Watt at 4000K 350mA
  189 Lm/Watt at 3000K 350mA

Code	Description	L	Kg
98697■	High Low Up /Down Surface Applique Led 16W+16W Neutral	580	3,100
98691■	High Low Up /Down Surface Applique Led 24W+24W Neutral	860	3,500
98692■	High Low Up /Down Surface Applique Led 32W+32W Neutral	1140	3,900
98693■	High Low Up /Down Surface Applique Led 40W+40W Neutral	1420	4,700
98698■	High Low Up /Down Surface Applique Led 16W+16W Warm	580	3,100
98694■	High Low Up /Down Surface Applique Led 24W+24W Warm	860	3,500
98695■	High Low Up /Down Surface Applique Led 32W+32W Warm	1140	3,900
98696■	High Low Up /Down Surface Applique Led 40W+40W Warm	1420	4,700

For dimmer version add letter **"D"** at the end of product code.

Colour Codes:
0 Colours | 1 White | 2 Titan | 3 Black

EASYLINE APPLIQUE

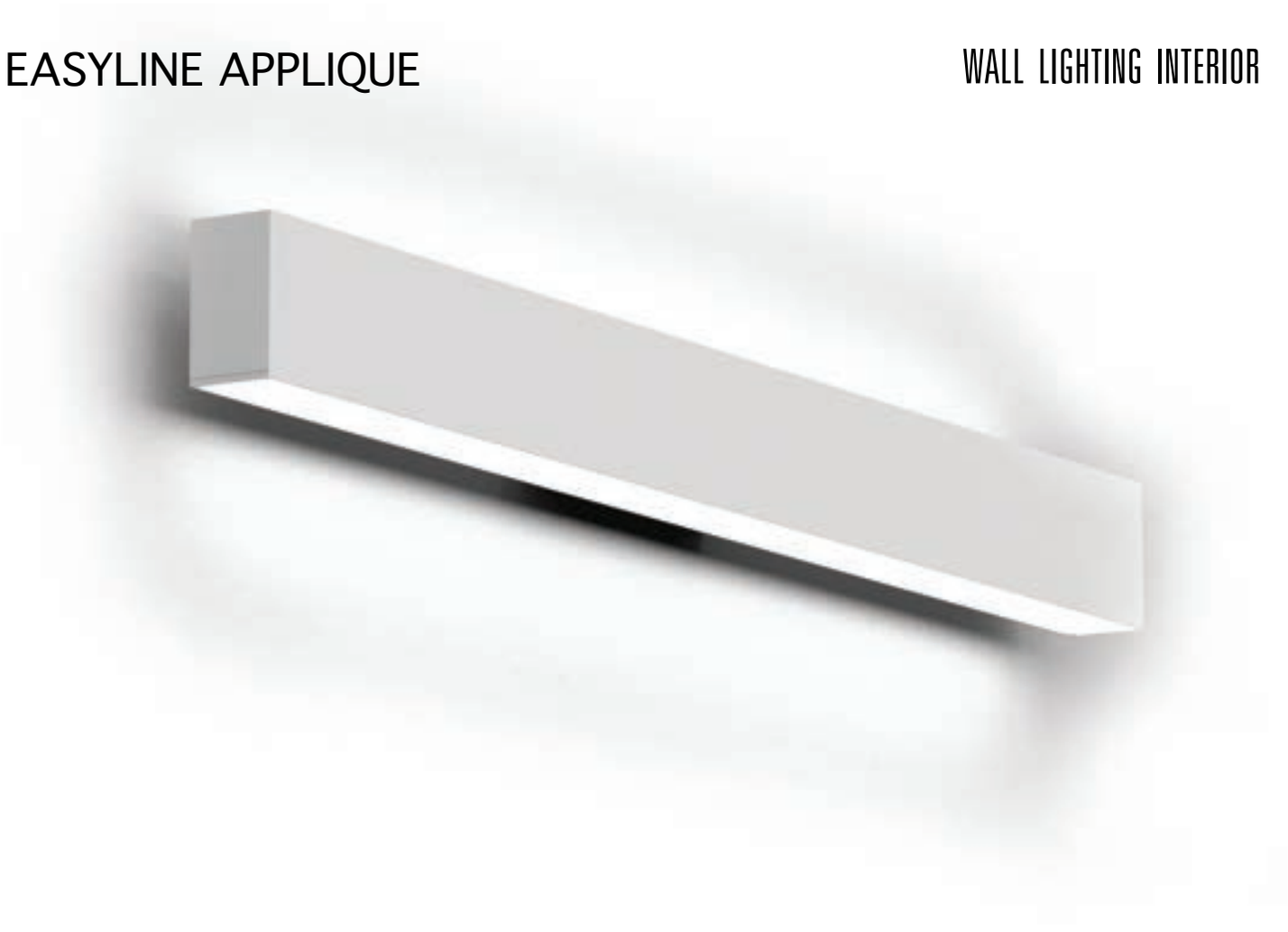

EASYLINE APPLIQUE combines the architectural style with the efficiency.
It produces perfect lighting conditions without annoying reflections and that is why it can be used from entrance areas to offices.
The visual benefit: The continuous-row system is illuminated absolutely uniformly from beginning to end,
is economically efficient, is maintenance-free and it has long service life.

Technical Features

- Housing from aluminium profile, painted electrostatically in selected colour.
- PMMA diffuser in opal.
- Removable plastic heads.
- Pure light without IR/UV radiation.
- Efficient thermal management.
- Up to 28W/m and 5000 Lm luminous flux range.
- Operation life: 50,000 hours with efficiency > 80% of the initial luminous flux (L80B10).
- Connection for operation on 230V/50Hz.

Upon request

- Connection for emergency lighting system, for one or three hours.
- Microprismatic or anaglyph diffuser.
- Available with higher colour rendering index (CRI).

EASYLINE APPLIQUE UP/ DOWN

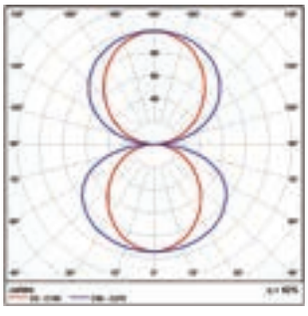

EASYLINE APPLIQUE

EASYLINE APPLIQUE

IP 40 | IK 03 | LED | 5 years WARRANTY | ta 25ºC

Included

- Aluminium body.
- Removable plastic heads.
- High efficient diffuser in opal PMMA.
- CRI: min. 80 / SDCM: 3
- Luminous Efficacy:
  209 Lumen / Watt (4000K) at 225mA
  197 Lumen / Watt (3000K) at 225mA

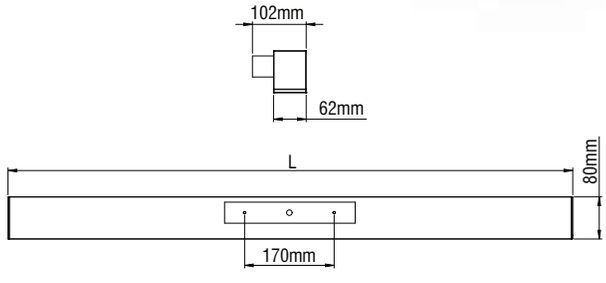

Code	Description	L	Kg
9906■0■	Easyline Led Applique 10W	590	2,000
9906■1■	Easyline Led Applique 15W	870	2,900
9906■2■	Easyline Led Applique 20W	1150	4,000
9906■3■	Easyline Led Applique 25W	1430	5,000

For dimmer version add letter **"D"** at the end of product code.

EASYLINE SURFACE APPLIQUE

IP 40 | IK 03 | LED | 5 years WARRANTY | ta 25ºC

Included

- Aluminium body.
- Removable plastic heads.
- High efficient diffuser in opal PMMA.
- CRI: min. 80 / SDCM: 3
- Luminous Efficacy:
  209 Lumen / Watt (4000K) at 225mA
  197 Lumen / Watt (3000K) at 225mA

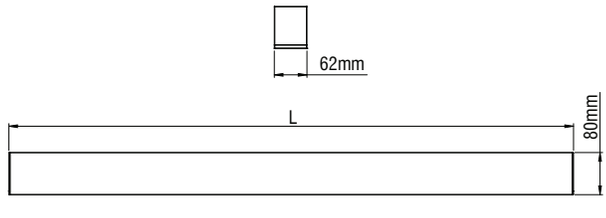

Code	Description	L	Kg
9907■0■	Easyline Led Surface Applique 10W	590	2,000
9907■1■	Easyline Led Surface Applique 15W	870	2,900
9907■2■	Easyline Led Surface Applique 20W	1150	4,000
9907■3■	Easyline Led Surface Applique 25W	1430	5,000

For dimmer version add letter **"D"** at the end of product code.

EASYLINE APPLIQUE

EASYLINE APPLIQUE UP/ DOWN

IP 40 | IK 03 | LED | 5 years WARRANTY | ta 25ºC | Included

- Aluminium body.
- Removable plastic heads.
- High efficient diffuser in opal PMMA.
- CRI: min. 80 / SDCM: 3
- Luminous Efficacy:
  209 Lumen / Watt (4000K) at 225mA
  197 Lumen / Watt (3000K) at 225mA

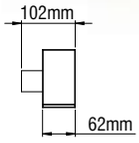

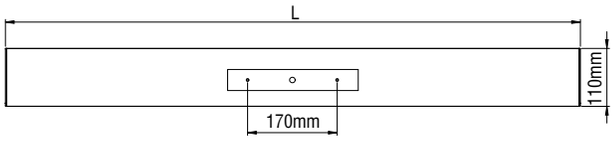

Code	Description	L	Kg
9904■0_	Easyline Led Applique Up/ Down 10W+10W	590	2,100
9904■1_	Easyline Led Applique Up/ Down 15W+15W	870	3,100
9904■2_	Easyline Led Applique Up/ Down 20W+20W	1150	4,200
9904■3_	Easyline Led Applique Up/ Down 25W+25W	1430	5,300

For dimmer version add letter **"D"** at the end of product code (not possible at L590mm)

EASYLINE SURFACE APPLIQUE UP/ DOWN

IP 40 | IK 03 | LED | 5 years WARRANTY | ta 25ºC | Included

- Aluminium body.
- Removable plastic heads.
- High efficient diffuser in opal PMMA.
- CRI: min. 80 / SDCM: 3
- Luminous Efficacy:
  209 Lumen / Watt (4000K) at 225mA
  197 Lumen / Watt (3000K) at 225mA

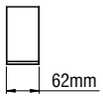

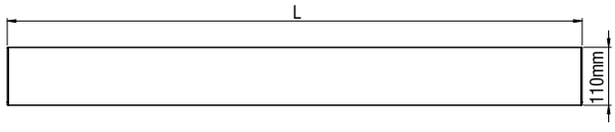

Code	Description	L	Kg
9905■0_	Easyline Led Surface Applique Up/ Down 10W+10W	590	2,100
9905■1_	Easyline Led Surface Applique Up/ Down 15W+15W	870	3,100
9905■2_	Easyline Led Surface Applique Up/ Down 20W+20W	1150	4,200
9905■3_	Easyline Led Surface Applique Up/ Down 25W+25W	1430	5,300

For dimmer version add letter **"D"** at the end of product code (not possible at L590mm)

Led Colour:
2 Warm 3 Neutral

Colour Codes:
0 Colours 1 White 2 Titan 3 Black 9 Anod.

EASYLINE APPLIQUE

SLOTLIGHT APPLIQUE

SLOTLIGHT APPLIQUE combines the architectural style with the efficiency. It produces perfect lighting conditions without annoying reflections and that is why it can be used from entrance areas to offices.
It escapes the restrictions of the T16 lamp by using LED lighting points that can have any spacing pitch and this gives the light line enormous flexibility. The visual benefit: The continuous-row system is illuminated absolutely uniformly from beginning to end, is economically efficient, is maintenance-free and it has long service life.

Technical Features

- Housing from aluminium profile, painted electrostatically in selected colour.
- Removable plastic heads.
- High efficient diffuser in opal PMMA.
- Flow recuperator in white colour.
- Pure light without IR/UV radiation.
- Efficient thermal management.
- Operation life: 50,000 hours with efficiency > 80% of the initial luminous flux (L80B10).
- Connection for operation on 230V/50Hz.

Upon request:
- Available with highest colour rendering index (CRI).
- Connection for emergency lighting system, for one or three hours.

SLOTLIGHT APPLIQUE

SLOTLIGHT APPLIQUE

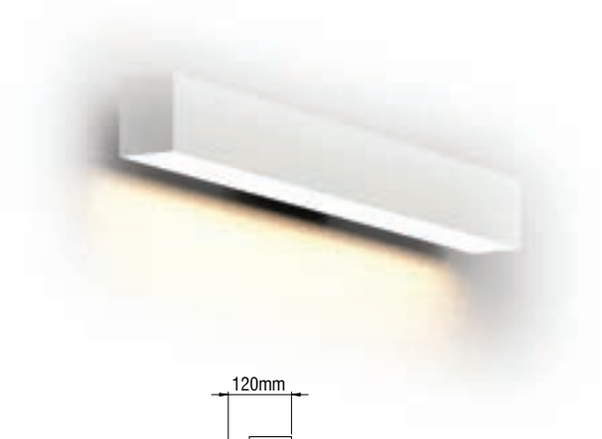

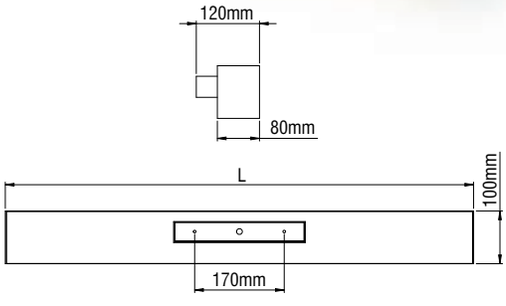

IP 40 | LED | 5 years WARRANTY | ta 25ºC | Included

- Version for LED CHIP.
- Aluminium body.
- Removable plastic heads.
- High efficient diffuser in opal PMMA.
- Flow recuperator in white colour.
- CRI: min. 80 / SDCM: 3
- Luminous Efficacy:
  201 Lumen / Watt at 4000K 350mA
  189 Lumen / Watt at 3000K 350mA

Code	Description	L	Kg
92777■	Slotlight Applique Led 33W Neutral	1160	3,500
92778■	Slotlight Applique Led 33W Warm	1160	3,500

For dimmer version add letter **"D"** at the end of product code.

SLOTLIGHT SURFACE APPLIQUE

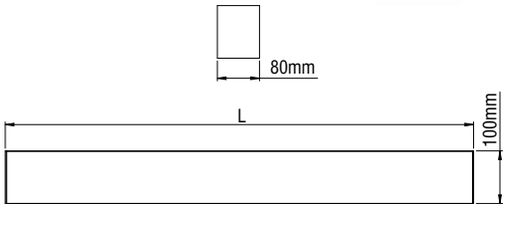

IP 40 | LED | 5 years WARRANTY | ta 25ºC | Included

- Version for LED CHIP.
- Aluminium body.
- Removable plastic heads.
- High efficient diffuser in opal PMMA.
- Flow recuperator in white colour.
- CRI: min. 80 / SDCM: 3
- Luminous Efficacy:
  201 Lumen / Watt at 4000K 350mA
  189 Lumen / Watt at 3000K 350mA

Code	Description	L	Kg
92779■	Slotlight Surface Applique Led 33W Neutral	1160	3,500
92780■	Slotlight Surface Applique Led 33W Warm	1160	3,500

For dimmer version add letter **"D"** at the end of product code.

SLOTLIGHT APPLIQUE

SLOTLIGHT APPLIQUE UP/ DOWN

IP 40 | LED | 5 years WARRANTY | ta 25ºC | Included

- Version for LED CHIP.
- Aluminium body.
- Removable plastic heads.
- High efficient diffuser in opal PMMA.
- Flow recuperator in white colour.
- CRI: min. 80 / SDCM: 3
- Luminous Efficacy:
  201 Lumen / Watt at 4000K 350mA
  189 Lumen / Watt at 3000K 350mA

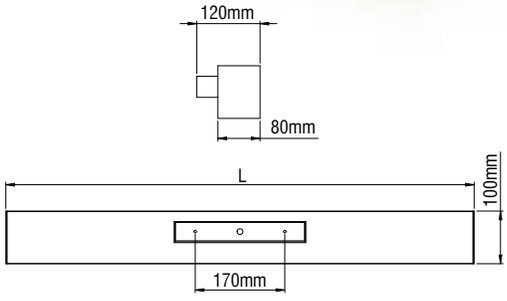

Code	Description	L	Kg
92773■	Slotlight Up /Down Applique Led 33W+16W Neutral	1160	3,500
92774■	Slotlight Up /Down Applique Led 33W+16W Warm	1160	3,500

For dimmer version add letter "**D**" at the end of product code.

SLOTLIGHT SURFACE APPLIQUE UP/ DOWN

IP 40 | LED | 5 years WARRANTY | ta 25ºC | Included

- Version for LED CHIP.
- Aluminium body.
- Removable plastic heads.
- High efficient diffuser in opal PMMA.
- Flow recuperator in white colour.
- CRI: min. 80 / SDCM: 3
- Luminous Efficacy:
  201 Lumen / Watt at 4000K 350mA
  189 Lumen / Watt at 3000K 350mA

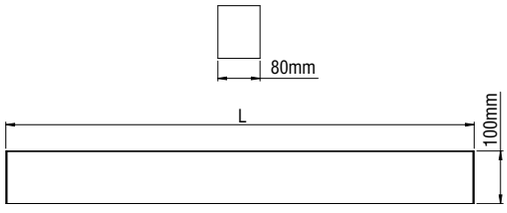

Code	Description	L	Kg
92775■	Slotlight Up /Down Surface Applique Led 33W+16W Neutral	1160	3,500
92776■	Slotlight Up /Down Surface Applique Led 33W+16W Warm	1160	3,500

For dimmer version add letter "**D**" at the end of product code.

Colour Codes:
0 Colours | 1 White | 2 Titan | 3 Black | 5 matt Alum. | 9 Anodized

COMLED

www.comled.com.au