ARCHITECTURAL LIGHTING

Lighting Petridis

COMLED

ARCHITECTURAL LIGHTING

Factory: Agios Athanasios - Thessaloniki
570 03 Agios Athanasios - Thessaloniki, T. +30 2310 701 081, F. +30 2310 702 370
e-mail: info@petridis-lighting.gr, www.petridis-lighting.gr

Adrianoupoleos Showroom
6, Adrianoupoleos str. - 551 33 Kalamaria,
T. +30 2310 408 700, F. +30 2310 407 037 -
+30 2310 407 016 e-mail: thessaloniki@petridis-lighting.gr

Athens Showroom
70 Ethnikis Antistaseos str., 152 31 Halandri,
T. +30 210 67 54 862-9, F. +30 210 67 15 791
e-mail: athens@petridis-lighting.gr

Patra Showroom
138, New Highway Patra - Athens, 264 43 Patra,
T. +30 2610 318 268, F. +30 2610 338 056
e-mail: patra@petridis-lighting.gr

PRODUCTION

The company owns the most updated technologically production equipment and controls every stage of its production and the quality of the products by the application of certified production systems.

LABORATORIES TESTING

Petridis S.A. guarantees photometric data sheets, according to the latest European and International recommentantions and standards, thanks to the support of our photometric laboratory.
The photometric tests are performed by procedures in accordance with all European standards.
Petridis S.A., thanks to its special design computer software, is able to achieve maximum efficiency and suitable light distribution of any louvre or reflector.

PRODUCT DEVELOPMENT

For **Petridis S.A. "Good Product"** means:
/ Constant High Quality / High Efficiency / Attention to Detail / Value for Money

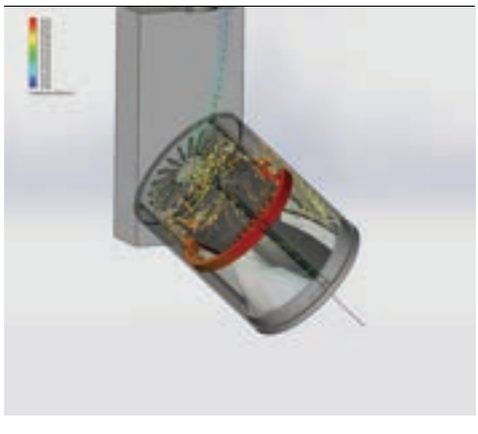

CERTIFICATES

Quality assurance

Reliable, functional and efficient products, new ideas, the continued development of design and the 55 years of experience in the lighting industry are factors of an equation that make a great pragmatism in technology resulting in high quality products.

Quality and service

An inextricable combination of a powerful advantage that gives us the strength to continue creatively in PETRIDIS Lighting, benefiting from a team of specialists, committed to satisfying customer needs in the field of illumination.

CERTIFICATE
Q-CERT

QMSCERT, an accredited provider of third-party system certification attests that:

PETRIDIS S.A.

Agios Athanasios, GR- 57003, Thessaloniki, Greece

with a scope of:

Design, Development, Production & Trading of Lightning Fittings, Metallic & Aluminum Lightning Poles, Signs & Lightning Signs

has established a Quality Management System that is in conformance with the requirements of the International Standard

EN ISO 9001:2015

Q-CERT

eucert
certification body

The management systems certification body eucert s.r.o. náměstí T.G. Masaryka 2957/9a, 690 02 Břeclav

CERTIFICATE

to confirm that

PETRIDIS AVEE LIGHTING BODIES S.A.

Agios Athanasios, 57003 Thessaloniki, Greece

Has implemented, maintains and is continually improving the management system according to the standard

EN ISO 14001:2015

in the area

Design, production, distribution, installation of lighting systems, metallic and aluminum lighting poles, signs and lighting signs.

The recertification audit, report no. RCA-GR-010-E, been proven that the management system meets the requirements of the above standard.

Certificate NO: E GR 005/21/version 1
Release date: 20.05.2023
Certification valid from: 20.05.2023
Certification valid till: 19.05.2026

Ing. Milan Gregoš
Head of the Certification body

IAF
S 3232
eucert

LIGHTING DESIGN

The advanced architectural solutions of our era, require the same dynamic approach and quality of lighting design, covering every ergonomic demand, efficiency and aesthetic upgrade of project. The lighting study is the coupling of art, technique and science of lighting and constitutes integral part of modern architectural design. It's the perfect combination of high quality, technological innovation and inspired design that increases the creative power of lighting, evolves his interaction in the space and the architecture and adds additional goodwill in the project while creating new experiences to people.

A team of experienced engineers, designers and lighting consultants of PETRIDIS SA collaborates daily with professionals and all of you to implement solutions in order to suit the lighting needs of each project, highlighting the uniqueness, always in accordance with international specifications and standards.

Our philosophy is summarized in the phrase:

"Humanergy Balance= Human Light + Energy Efficiency".

and is the concept of balance between the increase of well- being of people and maximum energy efficiency of a lighting project. It is achieved via an integrated lighting system that adjusts the balance of these two types with simultaneous environmental sensitivity using ecological materials and less energy-intensive light sources.

People should live and enjoy the premises, but also they should be activated by the lighting and thus improve their performance.

High performance, intelligent management of light and possibility of upgrade, mean that the investment is friendly to the environment, economical to operate and it is adapted in future altered situations.

Suitable and sufficient lighting, as defined by international standards, which highlights all the architectural features of the place and promotes the basic function.

Following the developments continuously as well as using new products, such as LED technology, the customer receives modern and innovative solutions, which provide ideal photographic results, reduced maintenance costs and power consumption as well.

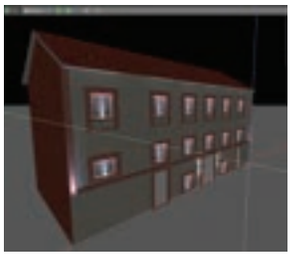
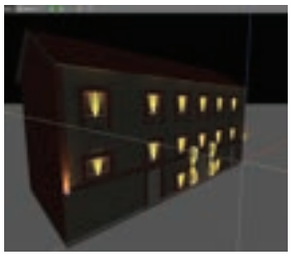

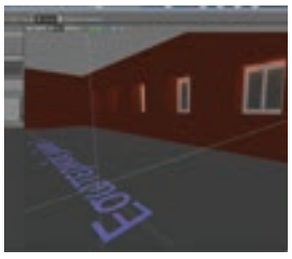

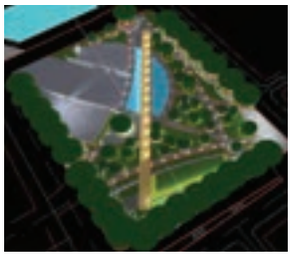
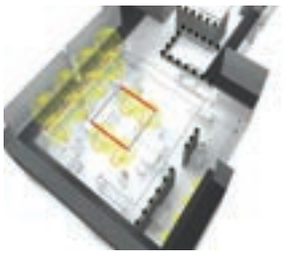

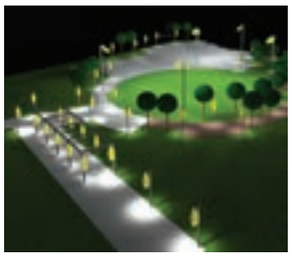

PARTNERS

Our company holds strong partnerships in many countries around the world, as you can see at the map below.
Contact by clicking on the country you are interested in.

If you are interested in a country that is not on our list, feel free to contact us immediately.

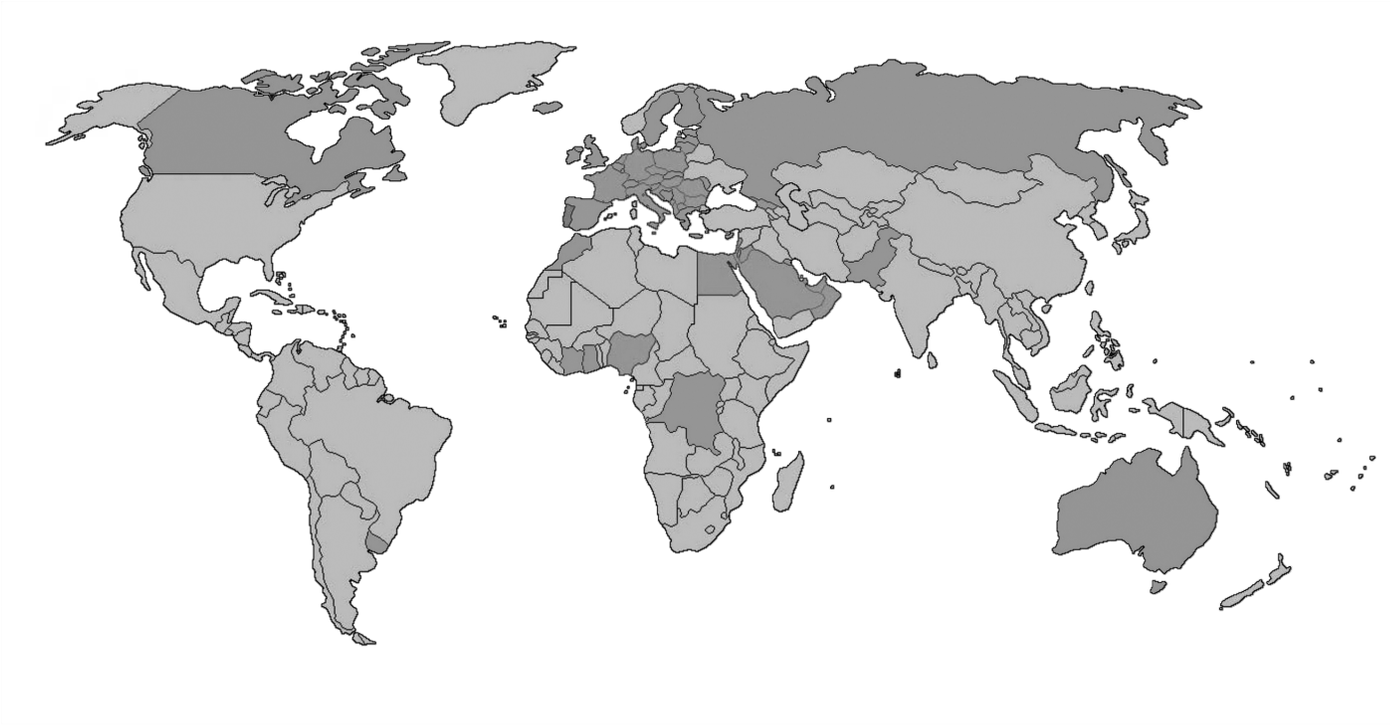

ALBANIA
AUSTRALIA
AUSTRIA
BAHRAIN
BELGIUM
BOSNIA - HERZEGOVINA
BULGARY
CANADA
CHANNEL ISLANDS
CONGO
CROATIA
CYPRUS
CZECH REPUBLIC
DENMARK
EGYPT
ESTONIA
FINLAND
FRANCE
GANA
GEORGIA
GERMANY
HONG KONG
HUNGARY
ICELAND
IRELAND
ISRAEL
ITALY
IVORY COAST
JORDAN
KOSOVO
KUWAIT
LATVIA
LEBANON
LITHUANIA
LUXEMBOURG
MALTA
MAYOTTE
MOLDOVA
MONTENEGRO
MOROCCO
NETHERLANDS
NIGERIA
NORTH MACEDONIA
OMAN
PAKISTAN
POLAND
PORTUGAL
QATAR
ROMANIA
RUSSIA
SAUDI ARABIA
SERBIA
SLOVAKIA
SLOVENIA
SPAIN
SWEDEN
SWITZERLAND
UNITED ARABIC EMIRATES
UNITED KINGDOM
URUGUAY

INDEX

CATEGORIES

DECORATIVE LIGHTING

DECORATIVE LIGHTING

Architectural Lighting

MORFI MINI
/ 14

MORFI
/ 20

MORFI PETAL
/ 34

MORFI IN PENDANT
/ 37

ARETI
/ 68

IRIDA
/ 70

SLING
/ 72

YPSILON
/ 76

IOLI SMALL RIM
/ 86

IOLI MINI
/ 87

AFRODITE
/ 88

FOURO
/ 90

NEON S
/ 96

NEON R
/ 97

MIRACLE
/ 98

EKALI S
/ 99

LOUPE TABLE
/ 107

MORFI FLOOR
/ 108

BELLITO
/ 110

URANIA
/ 112

FILIRA
/ 126

CUPOLA
/ 128

MORFI SMALL NET
/ 38

MORFI WAVE
/ 50

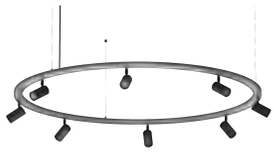

MORFI with SPOTS
/ 52

RIM
/ 60

LATERN
/ 80

LOUPE
/ 81

MORFI BELL
/ 82

MORFI STICKS
/ 85

ELEA
/ 91

ANCORA
/ 93

DALIDA
/ 94

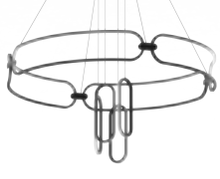

MORFI LINKS
/ 95

LAOURA
/ 100

ARIA
/ 101

OLIA
/ 102

KALIA
/ 104

KLIO
/ 116

ARMONIA
/ 118

THALIA
/ 122

ROXANI
/ 124

MORFI MINI

MORFI MINI is not just a customised product with an innovative design, but also a working tool for the lighting designers and engineers.
It combines the aesthetic with the latest LED technological standards and meets the various needs of the customers in a bespoke way: it allows them to "think big" offering totally unexpected results even to large scale projects.

Technical Features

- Aluminium body, painted electrostatically in selected colour.
- High efficient polycarbonate satin cover.
- Pure light without IR/UV radiation.
- Operation life: 50,000 hours with efficiency > 80% of the initial luminous flux (L80B10).
- Connection for operation on 230V/50Hz.

Upon Request

- At special shapes and dimensions.

MORFI MINI

MORFI MINI OUT

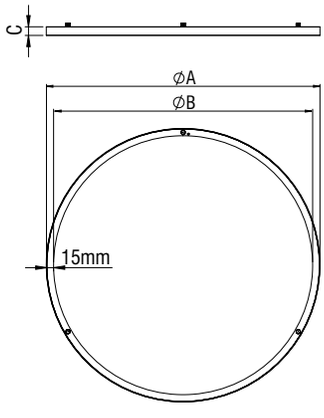

IP 40 | LED | 5 years WARRANTY | ta 25ºC | 24VDC

- Aluminium body, painted electrostatically in selected colour.
- High efficient polycarbonate satin cover.
- With transparent cable 2x0,75mm² 2,5m.
- Rosette, driver 24V DC and suspensions not included.
- CRI: min. 80 / SDCM: 3
- Luminous Efficacy:
  140Lm/W at 4000 K
  133Lm/W at 3000 K

Code	Description	Dimensions mm		
		ØA	ØB	C
8208000■■	Morfi Mini 1 In 14W 24V DC	310	280	18
8208001■■	Morfi Mini 1 Out 14W 24V DC	310	280	18
8208002■■	Morfi Mini 2 In 19W 24V DC	405	375	18
8208003■■	Morfi Mini 2 Out 19W 24V DC	405	375	18
8208004■■	Morfi Mini 3 In 29W 24V DC	600	570	18
8208005■■	Morfi Mini 3 Out 29W 24V DC	600	570	18
8208006■■	Morfi Mini 4 In 38W 24V DC	790	760	18
8208007■■	Morfi Mini 4 Out 38W 24V DC	790	760	18
8208008■■	Morfi Mini 5 In 48W 24V DC	980	950	18
8208009■■	Morfi Mini 5 Out 48W 24V DC	980	950	18

MORFI MINI IN

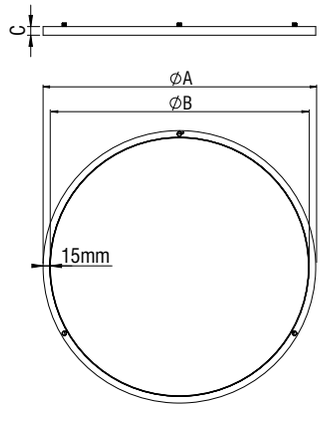

LED COLOUR CODES:	Colour Codes:
2 Warm 3 Neutral	0 Colours 1 White 2 Titan 3 Black

MORFI MINI

MORFI MINI ROSETTE AND SUSPENSION

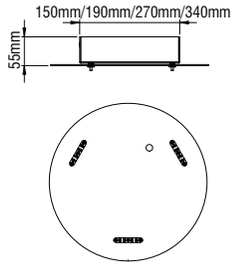

- For pendant use.
- Body from aluminium profile.
- Driver and suspensions not included.

Code	Description
82050■	Rosette ∅250
82051■	Rosette ∅300
82052■	Rosette ∅420
82053■	Rosette ∅500
900081	Single Suspension Morfi Mini 0,5m (3 pieces needed)*
900082	Single Suspension Morfi Mini 1m (3 pieces needed)*
900083	Single Suspension Morfi Mini 1,5m (3 pieces needed)*
900084	Single Suspension Morfi Mini 2m (3 pieces needed)*
900085	Single Suspension Morfi Mini 3m (3 pieces needed)*

* For installation at the rosette

Colour Codes:
0 Colours 1 White 2 Titan 3 Black

DRIVERS

Code.	Description
800099	Driver 50W 24V DC
800098	Driver 100W 24V DC
800058	Driver 150W 24V DC
800088	Driver 320W 24V DC
800018	Driver 60W 24V DC Dimmer Dali / Push Button
800017	Driver 100W 24V DC Dimmer Dali / Push Button
800108	Driver 150W 24V DC Dimmer Dali / Push Button
800101	Driver 60W 24V DC Dimmer Phase cut
800102	Driver 100W 24V DC Dimmer Phase cut

ROSETTE AND DRIVER SELECTION

DESCRIPTION	ELECTRONIC		DIMMER		
MORFI MINI DOWN / UP	ROSETTE/CODE	DRIVER/CODE	ROSETTE/CODE	**DRIVER** (Dali/Push Button) /Code	**DRIVER** (Phase Cut) /Code
Morfi Mini 1 In/ Out 14W	∅250/82050x	50W/800099	∅300/82051x	60W/800018	60W/800101
Morfi Mini 2 In/ Out 19W	∅250/82050x	50W/800099	∅300/82051x	60W/800018	60W/800101
Morfi Mini 3 In/ Out 29W	∅250/82050x	50W/800099	∅300/82051x	60W/800018	60W/800101
Morfi Mini 4 In/ Out 38W	∅250/82050x	50W/800099	∅300/82051x	60W/800018	60W/800101
Morfi Mini 5 In/ Out 48W	∅250/82050x	100W/800098	∅300/82051x	60W/800018	60W/800101
Synthesis of Morfi Mini	∅300/82051x	150W/800058	∅420/82052x	100W/800017	100W/800102
Synthesis of Morfi Mini			∅420/82052x	2x60W/2x800018	2x60W/2x800101
Synthesis of Morfi Mini			∅420/82052x	2x100W/2x800017	2x100W/2x800102
Synthesis of Morfi Mini	∅500/82053x	2x320W/2x800088	∅500/82053x	3x100W/3x800017	3x100W/3x800102
Synthesis of Morfi Mini	∅500/82053x	2x320W/2x800088	∅500/82053x	2x100W+2x150W / 2x800017+2x800108	3x100W/3x800102

MORFI MINI

MORFI MINI ROSETTE MASIF AND SUSPENSION

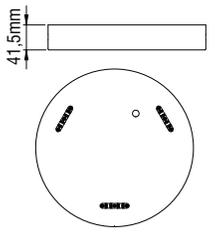

- For pendant use.
- Body from aluminium.
- Driver and suspensions not included.

Code	Description
82055■	Rosette Masif ∅260
82056■	Rosette Masif ∅300
82057■	Rosette Masif ∅430
900081	Single Suspension Morfi Mini 0,5m (3 pieces needed)*
900082	Single Suspension Morfi Mini 1m (3 pieces needed)*
900083	Single Suspension Morfi Mini 1,5m (3 pieces needed)*
900084	Single Suspension Morfi Mini 2m (3 pieces needed)*
900085	Single Suspension Morfi Mini 3m (3 pieces needed)*

* For installation at the rosette

Colour Codes:
0 Colours 1 White 2 Titan 3 Black

DRIVERS

Code.	Description
800099	Driver 50W 24V DC
800098	Driver 100W 24V DC
800058	Driver 150W 24V DC
800088	Driver 320W 24V DC
800018	Driver 60W 24V DC Dimmer Dali / Push Button
800017	Driver 100W 24V DC Dimmer Dali / Push Button
800108	Driver 150W 24V DC Dimmer Dali / Push Button
800101	Driver 60W 24V DC Dimmer Phase cut
800102	Driver 100W 24V DC Dimmer Phase cut

ROSETTE MASIF AND DRIVER SELECTION

DESCRIPTION	ELECTRONIC		DIMMER		
MORFI MINI IN/OUT	ROSETTE/CODE	DRIVER/CODE	ROSETTE/CODE	DRIVER (Dali/Push Button) /Code	DRIVER (Phase Cut) /Code
Morfi Mini 1 In/ Out 14W	∅260/82055x	50W/800099	∅260/82055x	60W/800018	60W/800101
Morfi Mini 2 In/ Out 19W	∅260/82055x	50W/800099	∅260/82055x	60W/800018	60W/800101
Morfi Mini 3 In/ Out 29W	∅260/82055x	50W/800099	∅260/82055x	60W/800018	60W/800101
Morfi Mini 4 In/ Out 38W	∅260/82055x	50W/800099	∅260/82055x	60W/800018	60W/800101
Morfi Mini 5 In/ Out 48W	∅260/82055x	100W/800098	∅260/82055x	60W/800018	60W/800101
Synthesis of Morfi Mini	∅300/82056x	150W/800058	∅300/82056x	100W/800017	100W/800102
Synthesis of Morfi Mini			∅300/82056x	2x60W/2x800018	2x60W/2x800101
Synthesis of Morfi Mini			∅300/82056x	2x100W/2x800017	2x100W/2x800102
Synthesis of Morfi Mini	∅430/82057x	2x320W/2x800088	∅430/82057x	4x100W/4x800017	4x100W/4x800102
Synthesis of Morfi Mini	∅430/82057x	2x320W/2x800088	∅430/82057x	4x150W/4x800108	4x100W/4x800102

MORFI MINI

POWER SUPPLY

- For pendant use.
- Body from aluminium profile.

Code	Description	Kg
82067	Rozette ∅80	0,100

SINGLE SUSPENSION

- For pendant use.

Code	Description
900091	Single Surface Suspension Morfi Mini 0,5m (3 pieces needed)*
900092	Single Surface Suspension Morfi Mini 1m (3 pieces needed)*
900093	Single Surface Suspension Morfi Mini 1,5m (3 pieces needed)*
900094	Single Surface Suspension Morfi Mini 2m (3 pieces needed)*
900095	Single Surface Suspension Morfi Mini 3m (3 pieces needed)*

* For installation at the ceiling

Colour Codes:
0 Colours 1 White 2 Titan 3 Black

DRIVERS

Code.	Description
800099	Driver 50W 24V DC
800098	Driver 100W 24V DC
800058	Driver 150W 24V DC
800088	Driver 320W 24V DC
800018	Driver 60W 24V DC Dimmer Dali / Push Button
800017	Driver 100W 24V DC Dimmer Dali / Push Button
800101	Driver 60W 24V DC Dimmer Phase cut
800102	Driver 100W 24V DC Dimmer Phase cut

MORFI MINI

MORFI WAVE MINI

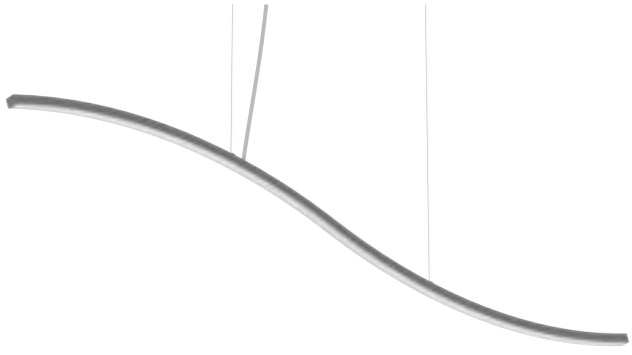

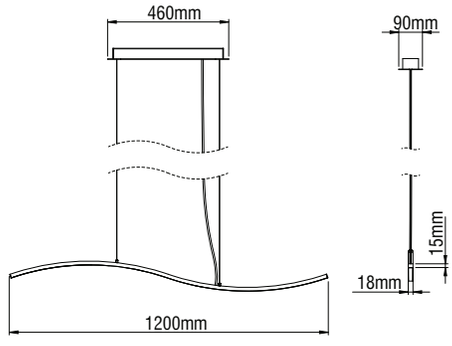

CE | F | IP 40 | LED | 5 years WARRANTY | ta 25°C | 24VDC

- Aluminium body, painted electrostatically in selected colour.
- High efficient polycarbonate satin cover.
- With transparent cable 2x0,75mm² 2,5m.
- Rosette, driver 24V DC and suspensions 2m included.
- CRI: min. 80 / SDCM: 3
- Luminous Efficacy:
  140Lm/W at 4000 K
  133Lm/W at 3000 K

Code	Description
8208300■ ■	Morfi Mini Linear Wave 18W 24V DC
8208400■ ■	Morfi Mini Linear Wave 18W 24V DC Dimmer (Dali/Push Button)
8208440■ ■	Morfi Mini Linear Wave 18W 24V DC Dimmer (Phase Cut)

LED COLOUR CODES: 2 Warm 3 Neutral

Colour Codes: 0 Colours 1 White 2 Titan 3 Black

MORFI is not just a customised product with an innovative design, but also a working tool for the lighting designers and engineers. It combines the aesthetic with the latest LED technological standards and meets the various needs of the customers in a bespoke way: it allows them to "think big" offering totally unexpected results even to large scale projects.

Technical Features

- Aluminium body, painted electrostatically in selected colour.
- High efficient polycarbonate satin cover.
- Pure light without IR/UV radiation.
- Operation life: 50,000 hours with efficiency > 80% of the initial luminous flux (L80B10).
- Connection for operation on 230V/50Hz.

Upon Request

- At special shapes and dimensions.
- Connection for operation on 230V-50/60Hz with dimmer dali or 1-10VDC ballast.
- With mirror *

*

MORFI

MORFI SMALL OUT

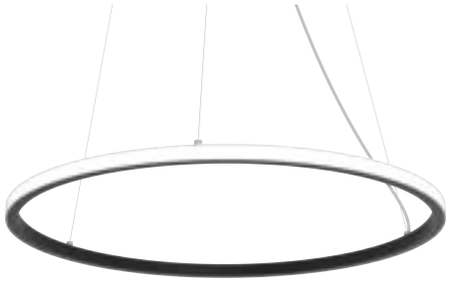

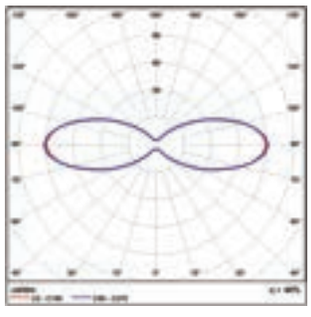

IP 40 | LED | 5 years WARRANTY | ta 25ºC | 24VDC

- Aluminium body, painted electrostatically in selected colour.
- High efficient polycarbonate satin cover.
- With transparent cable 2x0,75mm² 2,5m.
- Rosette, driver 24V DC and suspensions not included.
- CRI: min. 80 / SDCM: 3
- Luminous Efficacy:
  140Lm/W at 4000 K
  133Lm/W at 3000 K

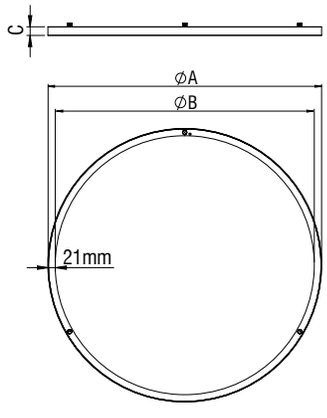

Code	Description	Dimensions mm		
		∅A	∅B	C
8200000	Morfi Small 1 In 30W 24V DC	610	570	25
8200001	Morfi Small 1 Out 30W 24V DC	610	570	25
8200002	Morfi Small 2 In 40W 24V DC	805	765	25
8200003	Morfi Small 2 Out 40W 24V DC	805	765	25
8200004	Morfi Small 3 In 55W 24V DC	1090	1050	25
8200005	Morfi Small 3 Out 55W 24V DC	1090	1050	25
8200006	Morfi Small 4 In 70W 24V DC	1470	1430	25
8200007	Morfi Small 4 Out 70W 24V DC	1470	1430	25

MORFI SMALL IN

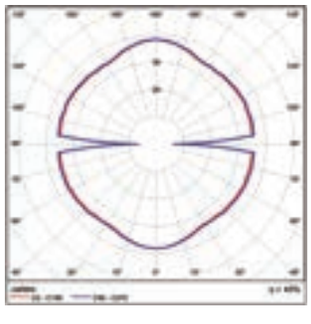

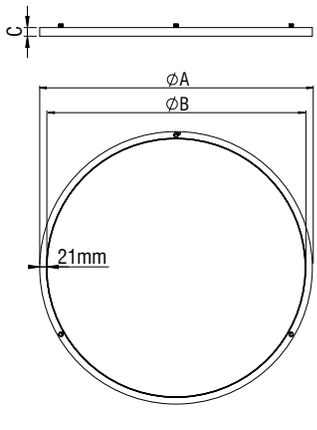

LED COLOUR CODES:	Colour Codes:
2 Warm 3 Neutral	0 Colours 1 White 2 Titan 3 Black

MORFI

MORFI SMALL OUT LO (Low Output)

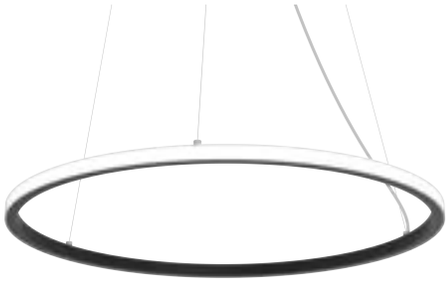

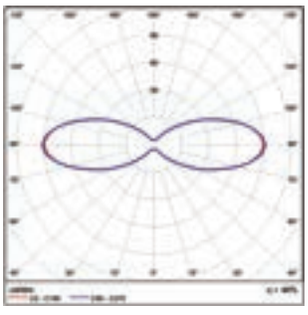

IP 40 | LED | 5 years WARRANTY | ta 25ºC | 24VDC

- Aluminium body, painted electrostatically in selected colour.
- High efficient polycarbonate satin cover.
- With transparent cable 2x0,75mm² 2,5m.
- Rosette, driver 24V DC and suspensions not included.
- CRI: min. 80 / SDCM: 3
- Luminous Efficacy:
  100Lm/W at 4000 K
  95Lm/W at 3000 K

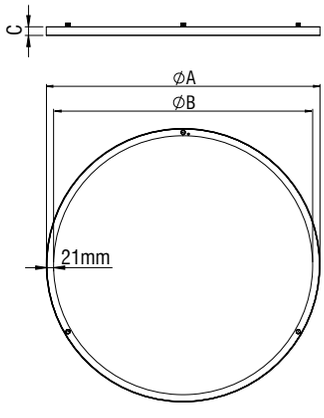

Code	Description	Dimensions mm		
		ØA	ØB	C
8202000	Morfi Small 1 In LO 20W 24V DC	610	570	25
8202001	Morfi Small 1 Out LO 20W 24V DC	610	570	25
8202002	Morfi Small 2 In LO 25W 24V DC	805	765	25
8202003	Morfi Small 2 Out LO 25W 24V DC	805	765	25
8202004	Morfi Small 3 In LO 35W 24V DC	1090	1050	25
8202005	Morfi Small 3 Out LO 35W 24V DC	1090	1050	25
8202006	Morfi Small 4 In LO 46W 24V DC	1470	1430	25
8202007	Morfi Small 4 Out LO 46W 24V DC	1470	1430	25

MORFI SMALL IN LO (Low Output)

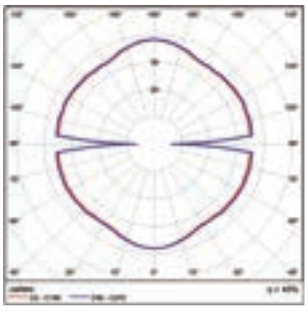

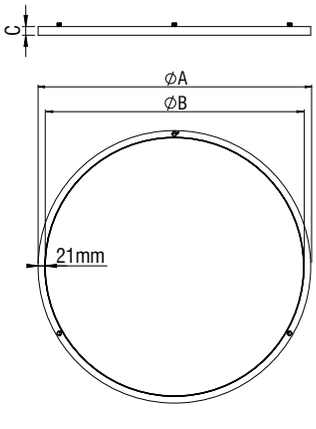

LED COLOUR CODES:	
2 Warm	3 Neutral

Colour Codes:			
0 Colours	1 White	2 Titan	3 Black

MORFI SMALL DOWN

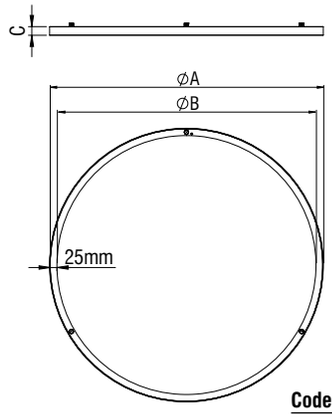

CE | F | IP 40 | LED | 5 years WARRANTY | ta 25ºC | 24VDC

- Aluminium body, painted electrostatically in selected colour.
- High efficient polycarbonate satin cover.
- With transparent cable 2x0,75mm² 2,5m.
- Rosette, driver 24V DC and suspensions not included.
- CRI: min. 80 / SDCM: 3
- Luminous Efficacy:
  100Lm/W at 4000 K
  95Lm/W at 3000 K

Code	Description	Dimensions mm		
		ØA	ØB	C
8201000■■	Morfi Small 1 Down 20W 24V DC	630	580	21
8201002■■	Morfi Small 2 Down 25W 24V DC	780	730	21
8201004■■	Morfi Small 3 Down 35W 24V DC	1100	1050	21
8201006■■	Morfi Small 4 Down 46W 24V DC	1450	1400	21

Note:
Use Down version in synthesis only with LO version of In and Out edition to achive uniform lighting.

MORFI SMALL UP

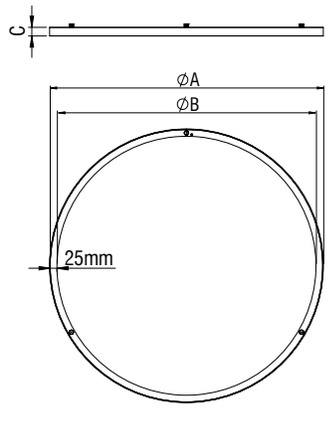

CE | F | IP 20 | LED | 5 years WARRANTY | ta 25ºC | 24VDC

- Aluminium body, painted electrostatically in selected colour.
- High efficient polycarbonate satin cover.
- With transparent cable 2x0,75mm² 2,5m.
- Rosette, driver 24V DC and suspensions not included.
- CRI: min. 80 / SDCM: 3
- Luminous Efficacy:
  100Lm/W at 4000 K
  95Lm/W at 3000 K

Code	Description	Dimensions mm		
		ØA	ØB	C
8203000■■	Morfi Small 1 Up 20W 24V DC	630	580	21
8203002■■	Morfi Small 2 Up 25W 24V DC	780	730	21
8203004■■	Morfi Small 3 Up 35W 24V DC	1100	1050	21
8203006■■	Morfi Small 4 Up 46W 24V DC	1450	1400	21

Note:
Use Up version in synthesis only with LO version of In and Out edition to achive uniform lighting.

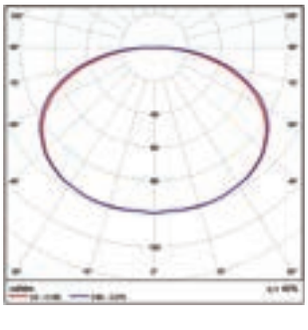

LED COLOUR CODES:	Colour Codes:
2 Warm 3 Neutral	0 Colours 1 White 2 Titan 3 Black

MORFI

MORFI MEDIUM IN

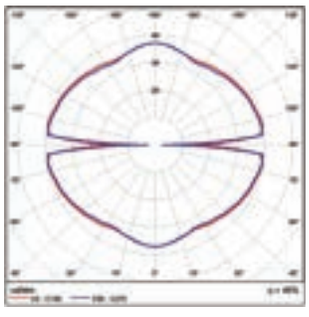

CE | F | IP 40 | LED | 5 years WARRANTY | ta 25°C | 24VDC

- Aluminium body, painted electrostatically in selected colour.
- High efficient polycarbonate satin cover.
- With transparent cable 2x0,75mm² 2,5m up to 80W and 4x0,75mm² 2,5m for more than 80W.
- Rosette, driver 24V DC and suspensions not included.
- CRI: min. 80 / SDCM: 3
- Luminous Efficacy:
  140Lm/W at 4000 K
  133Lm/W at 3000 K

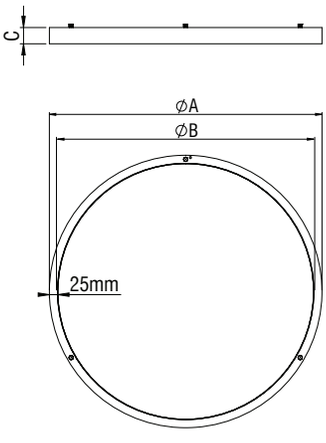

Code	Description	Dimensions mm		
		ØA	ØB	C
8200010■ ■	Morfi Medium 1 In 30W 24V DC	610	560	48
8200011■ ■	Morfi Medium 1 Out 30W 24V DC	610	560	48
8200012■ ■	Morfi Medium 2 In 40W 24V DC	805	755	48
8200013■ ■	Morfi Medium 2 Out 40W 24V DC	810	760	48
8200014■ ■	Morfi Medium 3 In 55W 24V DC	1090	740	48
8200015■ ■	Morfi Medium 3 Out 55W 24V DC	1100	1050	48
8200016■ ■	Morfi Medium 4 In 70W 24V DC	1470	1420	48
8200017■ ■	Morfi Medium 4 Out 70W 24V DC	1480	1430	48
8200020■ ■	Morfi Medium 1 In2 60W 24V DC	610	560	48
8200021■ ■	Morfi Medium 1 Out2 60W 24V DC	610	560	48
8200022■ ■	Morfi Medium 2 In2 80W 24V DC	805	755	48
8200023■ ■	Morfi Medium 2 Out2 80W 24V DC	810	760	48
8200024■ ■	Morfi Medium 3 In2 105W 24V DC	1090	740	48
8200025■ ■	Morfi Medium 3 Out2 105W 24V DC	1100	1050	48
8200026■ ■	Morfi Medium 4 In2 140W 24V DC	1470	1420	48
8200027■ ■	Morfi Medium 4 Out2 140W 24V DC	1480	1430	48

MORFI MEDIUM OUT

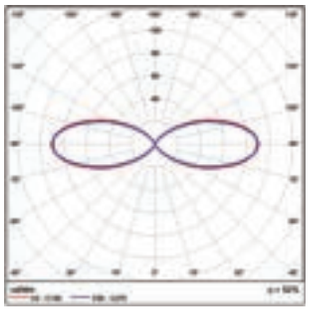

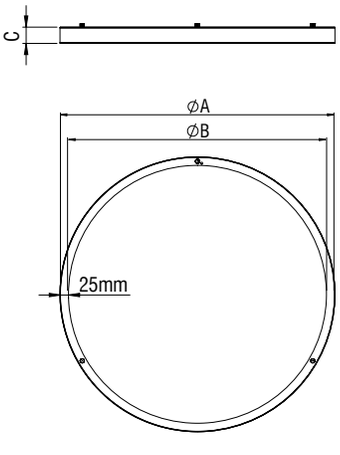

LED COLOUR CODES:	
2 Warm	3 Neutral

Colour Codes:			
0 Colours	1 White	2 Titan	3 Black

MORFI MEDIUM IN LO (Low Output)

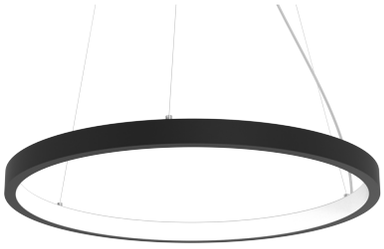

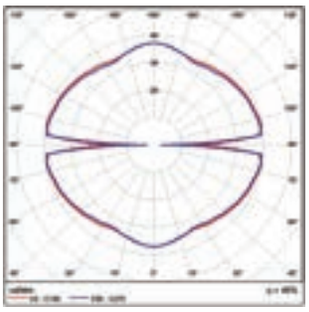

IP 40 | LED | 5 years WARRANTY | ta 25ºC | 24VDC

- Aluminium body, painted electrostatically in selected colour.
- High efficient polycarbonate satin cover.
- With transparent cable 2x0,75mm² 2,5m up to 80W and 4x0,75mm² 2,5m for more than 80W.
- Rosette, driver 24V DC and suspensions not included.
- CRI: min. 80 / SDCM: 3
- Luminous Efficacy:
  100Lm/W at 4000 K
  95Lm/W at 3000 K

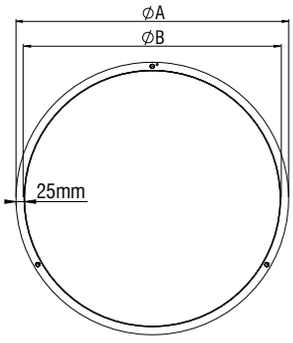

Code	Description		Dimensions mm		
			ØA	ØB	C
8202020■ ■	Morfi Medium 1 In2	LO 40W 24V DC	610	560	48
8202021■ ■	Morfi Medium 1 Out2	LO 40W 24V DC	610	560	48
8202022■ ■	Morfi Medium 2 In2	LO 50W 24V DC	805	755	48
8202023■ ■	Morfi Medium 2 Out2	LO 50W 24V DC	810	760	48
8202024■ ■	Morfi Medium 3 In2	LO 70W 24V DC	1090	740	48
8202025■ ■	Morfi Medium 3 Out2	LO 70W 24V DC	1100	1050	48
8202026■ ■	Morfi Medium 4 In2	LO 95W 24V DC	1470	1420	48
8202027■ ■	Morfi Medium 4 Out2	LO 95W 24V DC	1480	1430	48

MORFI MEDIUM OUT LO (Low Output)

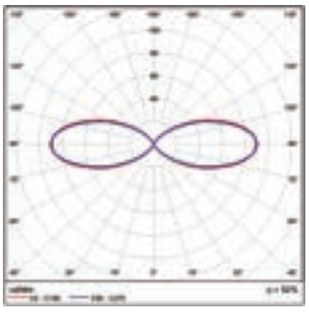

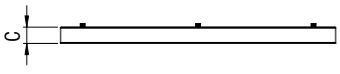

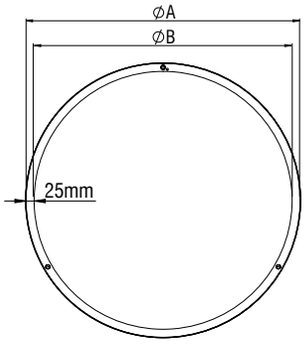

LED COLOUR CODES:	Colour Codes:
2 Warm 3 Neutral	0 Colours 1 White 2 Titan 3 Black

MORFI MEDIUM DOWN

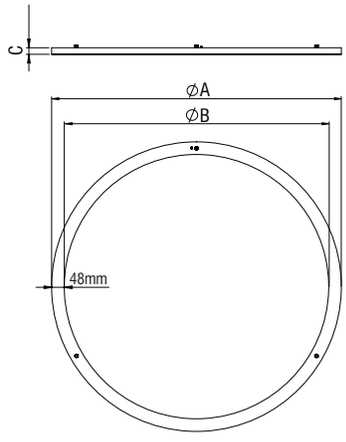

IP 40 | LED | 5 years WARRANTY | ta 25ºC | 24VDC

- Aluminium body, painted electrostatically in selected colour.
- High efficient polycarbonate satin cover.
- With transparent cable 2x0,75mm² 2,5m up to 80W and 4x0,75mm² 2,5m for more than 80W.
- Rosette, driver 24V DC and suspensions not included.
- CRI: min. 80 / SDCM: 3
- Luminous Efficacy:
  100Lm/W at 4000 K
  95Lm/W at 3000 K

Code	Description	Dimensions mm		
		ØA	ØB	C
8201024■ ■	Morfi Medium 3 Down2 70W 24V DC	1100	1004	25
8201026■ ■	Morfi Medium 4 Down2 95W 24V DC	1450	1354	25

Note:
Use Down version in synthesis only with LO version of In and Out edition to achive uniform lighting.

MORFI MEDIUM UP

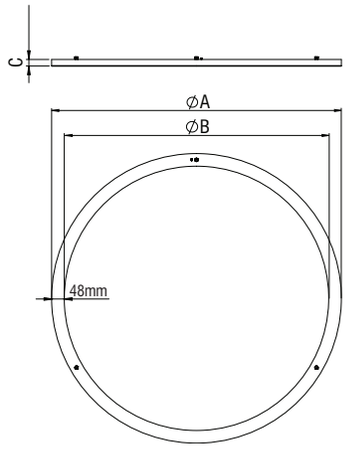

IP 20 | LED | 5 years WARRANTY | ta 25ºC | 24VDC

- Aluminium body, painted electrostatically in selected colour.
- High efficient polycarbonate satin cover.
- With transparent cable 2x0,75mm² 2,5m up to 80W and 4x0,75mm² 2,5m for more than 80W.
- Rosette, driver 24V DC and suspensions not included.
- CRI: min. 80 / SDCM: 3
- Luminous Efficacy:
  100Lm/W at 4000 K
  95Lm/W at 3000 K

Code	Description	Dimensions mm		
		ØA	ØB	C
8203024■ ■	Morfi Medium 3 Up2 70W 24V DC	1100	1004	25
8203026■ ■	Morfi Medium 4 Up2 95W 24V DC	1450	1354	25

Note:
Use Up version in synthesis only with LO version of In and Out edition to achive uniform lighting.

LED COLOUR CODES:	Colour Codes:
2 Warm 3 Neutral	0 Colours 1 White 2 Titan 3 Black

MORFI

MORFI BIG IN

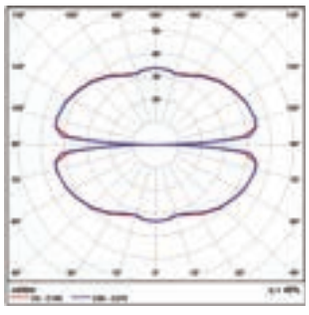

CE | F | IP 40 | LED | 5 years WARRANTY | ta 25ºC | 24VDC

- Aluminium body, painted electrostatically in selected colour.
- High efficient polycarbonate satin cover.
- With transparent cable 2x0,75mm² 2,5m up to 80W and 4x0,75mm² 2,5m for more than 80W.
- Rosette, driver 24V DC and suspensions not included.
- CRI: min. 80 / SDCM: 3
- Luminous Efficacy:
  140Lm/W at 4000 K
  133Lm/W at 3000 K

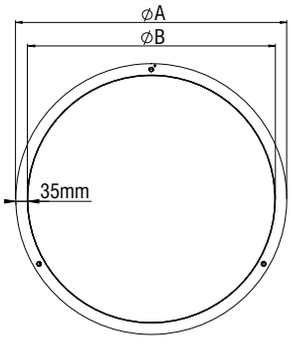

Code	Description	Dimensions mm		
		ØA	ØB	C
8200032■ ■	Morfi Big 2 In 80W 24V DC	800	724	68
8200033■ ■	Morfi Big 2 Out 80W 24V DC	790	714	68
8200034■ ■	Morfi Big 3 In 105W 24V DC	1090	1014	68
8200035■ ■	Morfi Big 3 Out 105W 24V DC	1120	1044	68
8200036■ ■	Morfi Big 4 In 140W 24V DC	1450	1374	68
8200037■ ■	Morfi Big 4 Out 140W 24V DC	1470	1394	68

MORFI BIG OUT

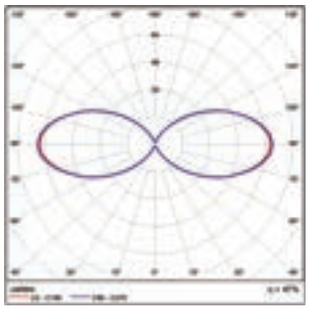

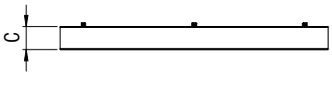

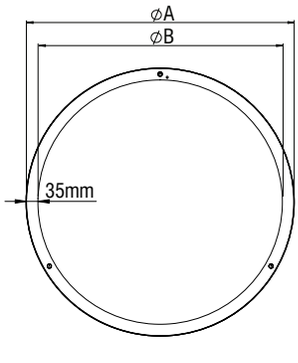

LED COLOUR CODES:	
2 Warm	3 Neutral

Colour Codes:			
0 Colours	1 White	2 Titan	3 Black

MORFI

MORFI MEDIUM DOWN HO

IP 40 | LED | 5 years WARRANTY | ta 25ºC | not included

- Aluminium body, painted electrostatically in selected colour.
- High efficient polycarbonate satin cover.
- With transparent cable 5x0,5mm² 2,5m.
- Rosette, driver and suspensions not included.
- CRI: min. 80 / SDCM: 3
- Luminous Efficacy:
  4000 K: 169Lm/W at 350mA
  3000 K: 161Lm/W at 350mA

Code	Description	Dimensions mm		
		ØA	ØB	C
8201030	Morfi Medium 3 Down HO 94W	1100	1004	25
8201031	Morfi Medium 4 Down HO 125W	1450	1354	25

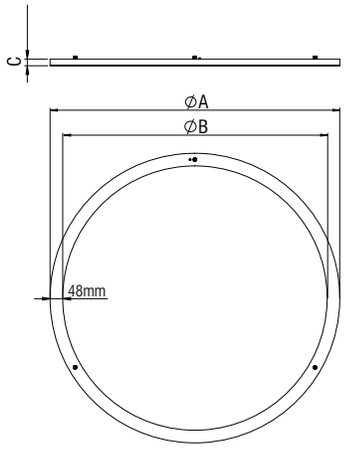

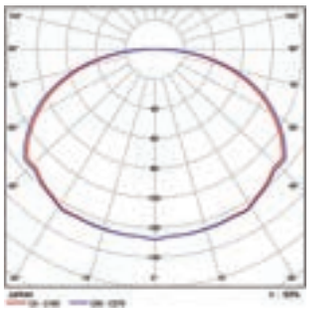

LED COLOUR CODES:	Colour Codes:
2 Warm 3 Neutral	0 Colours 1 White 2 Titan 3 Black

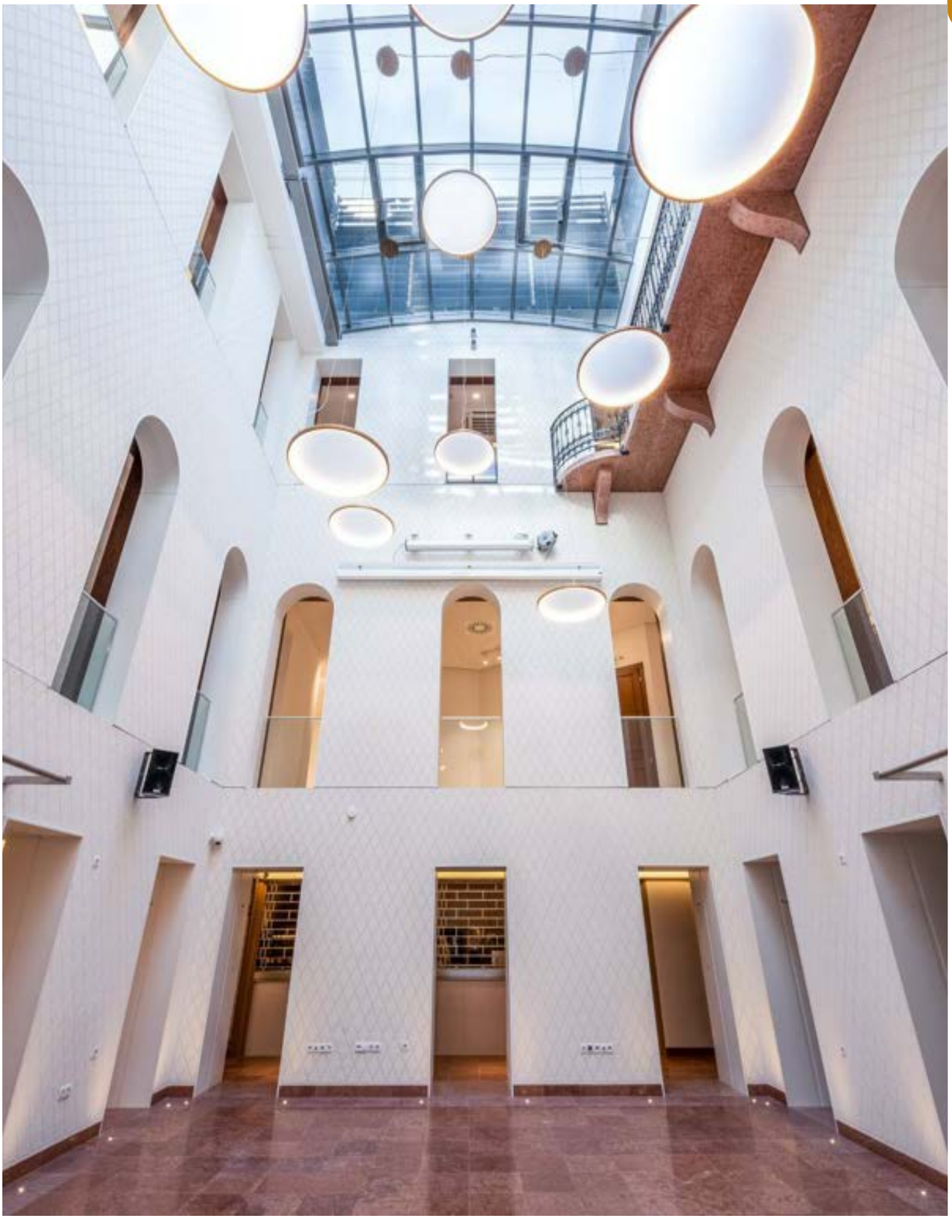

MORFI PETAL

IP **40** | LED | 5 years WARRANTY | ta 25°C | not included

- Aluminium body, painted electrostatically in selected colour.
- High efficient polycarbonate satin cover.
- Rosette, driver and suspension not included.
- 3 pieces of suspension needed.
- CRI: min. 80 / SDCM: 3
- Luminous Efficacy:
  140Lm/W at 4000 K
  133Lm/W at 3000 K

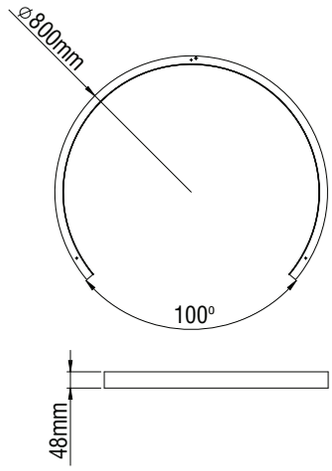

Code	Description
8200040■■	Morfi Petal ø800 27W 24V DC
8200041■■	Morfi Petal ø800 54W 24V DC

MORFI PETAL

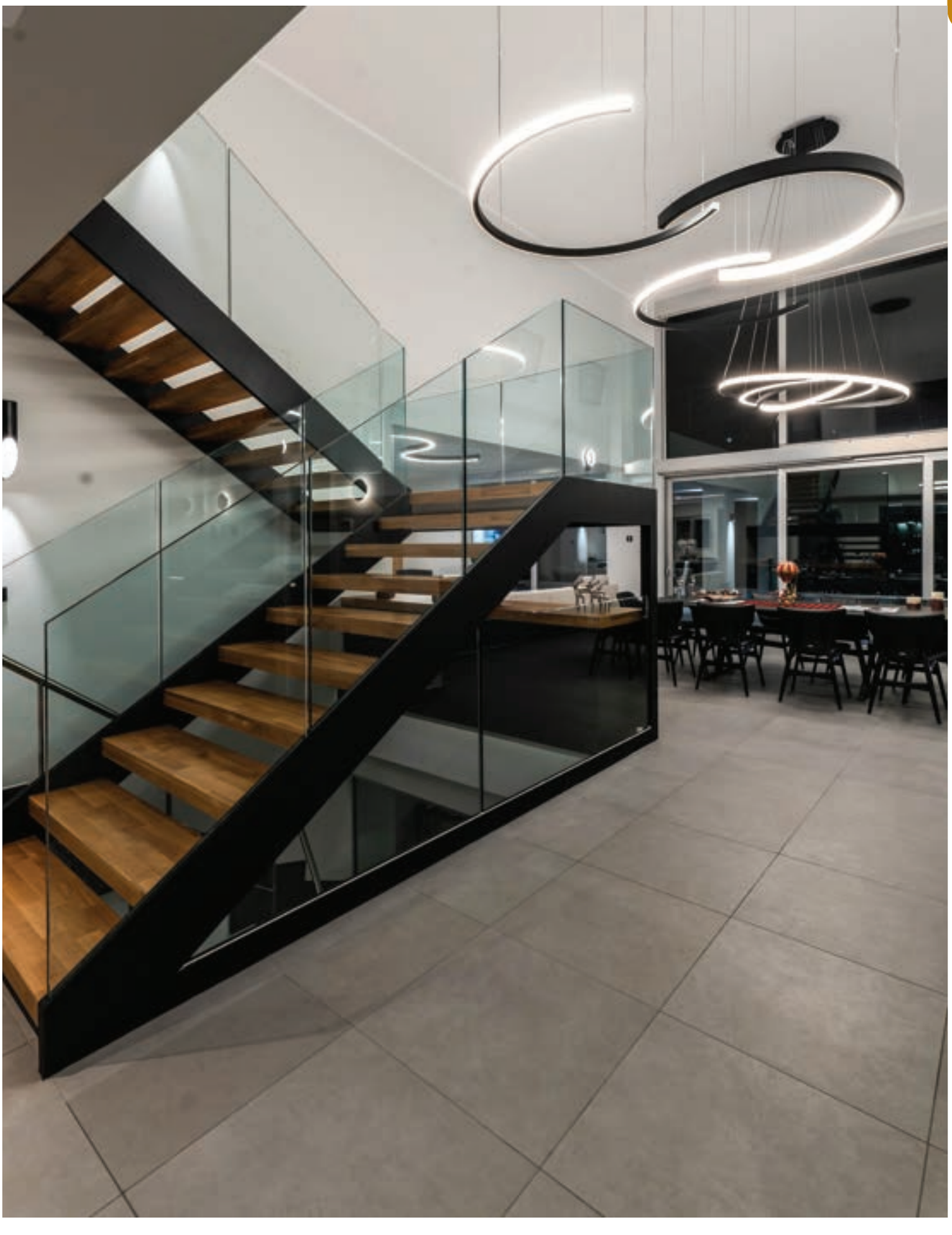

MORFI PETAL

MORFI IN PENDANT

CE | F | IP 40 | LED | 5 years WARRANTY | ta 25°C | not included

- Aluminium body, painted electrostatically in selected colour.
- High efficient polycarbonate satin cover.
- Rosette and fixed suspension included.
- Driver installation in a separate wicket.
- Driver out of the body (not included).
- CRI: min. 80 / SDCM: 3
- Luminous Efficacy:
  140Lm/W at 4000 K
  133Lm/W at 3000 K

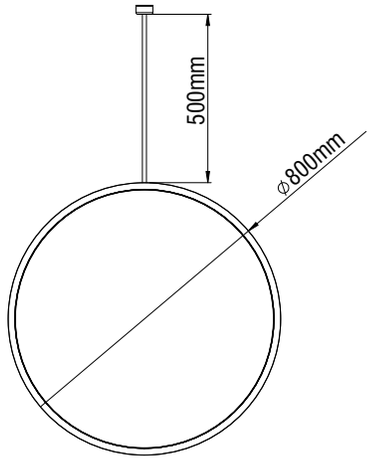

Code	Description
8200570■ ■	Morfi In Pendant 40W 24V DC

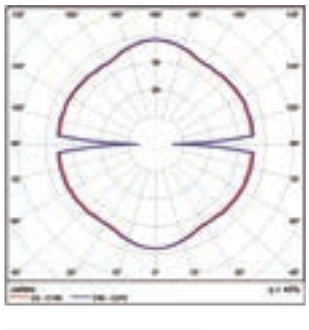

LED COLOUR CODES:	Colour Codes:
2 Warm 3 Neutral	0 Colours 1 White 2 Titan 3 Black

MORFI SMALL NET

IP **40** | LED | 5 years WARRANTY | ta 25°C | not included

- Aluminium body, painted electrostatically in selected colour.
- High efficient polycarbonate satin cover.
- Rosette, driver and suspension not included.
- 4 pieces of suspension needed.
- CRI: min. 80 / SDCM: 3
- Luminous Efficacy:
  100Lm/W at 4000 K
  100Lm/W at 3000 K

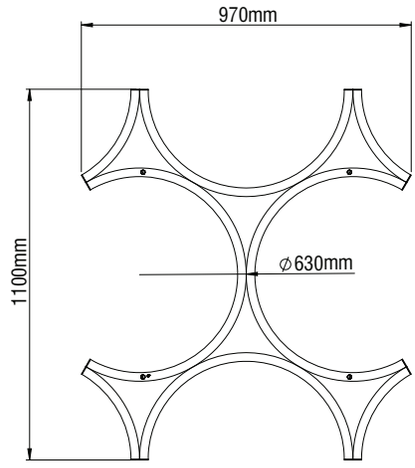

Code	Description
8200736■■	Morfi Small Net 55W 24V DC

LED COLOUR CODES:	Colour Codes:
2 Warm 3 Neutral	0 Colours 1 White 2 Titan 3 Black

MORFI SMALL NET

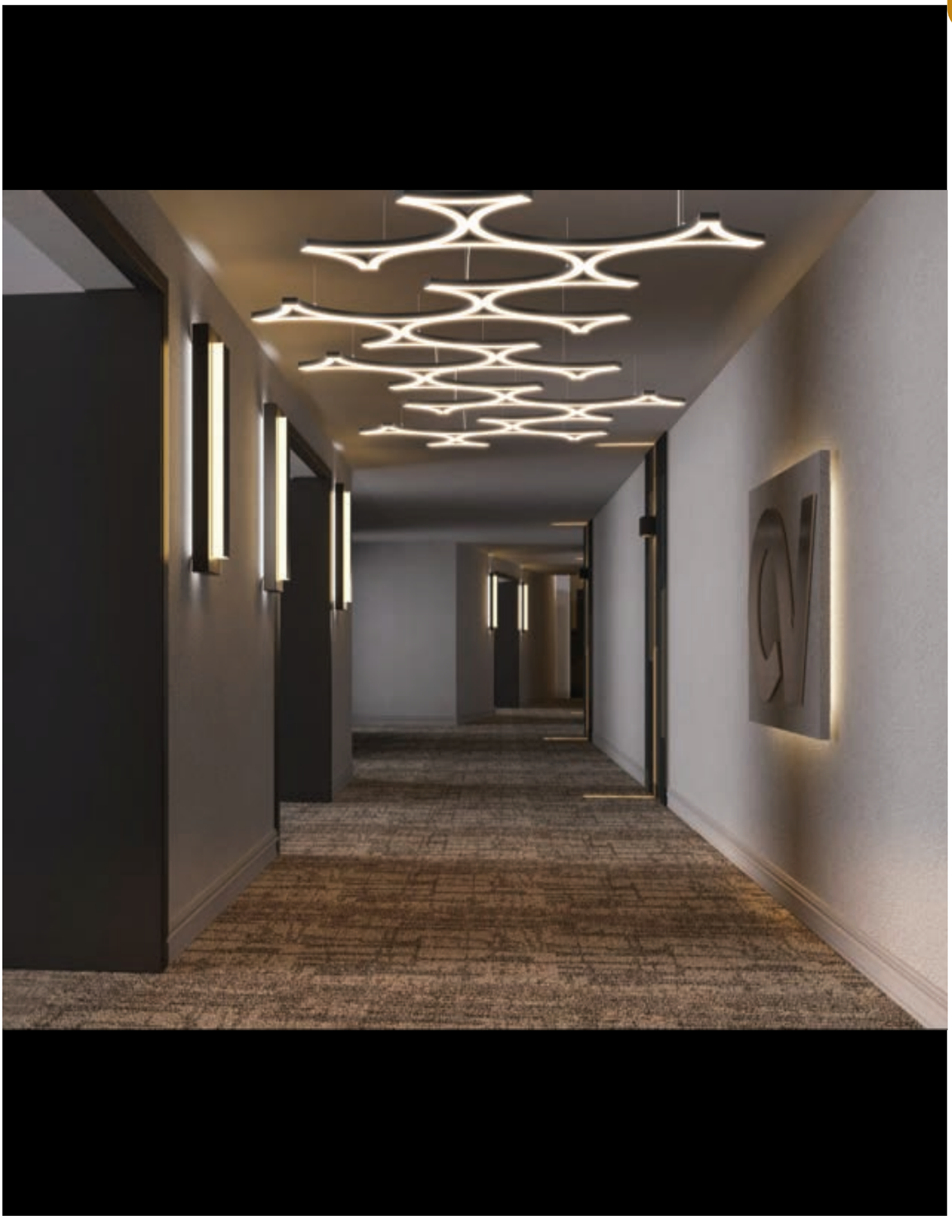

MORFI

MORFI SMALL PART

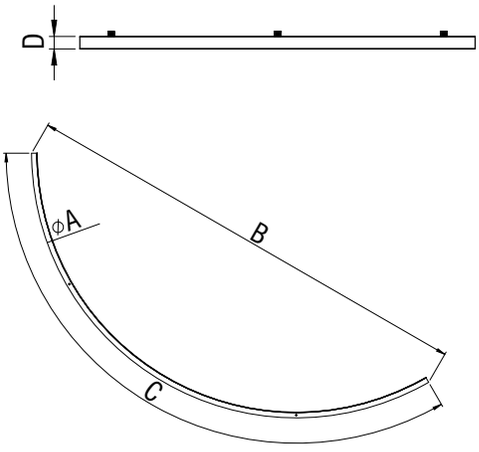

Code	Description	Dimensions mm			
		ØA	B	C(o)	D
8200100■ ■	Morfi Small 5 Part In 32W 24V DC	2010-1960	1740	120	25
8200101■ ■	Morfi Small 5 Part Out 32W 24V DC	2010-1960	1775	120	25
8200102■ ■	Morfi Small 6 Part In 29W 24V DC	3030-2980	1780	72	25
8200103■ ■	Morfi Small 6 Part Out 29W 24V DC	3020-2970	1800	72	25
8200104■ ■	Morfi Small 7 Part In 27W 24V DC	4020-3970	1745	51,43	25
8200105■ ■	Morfi Small 7 Part Out 27W 24V DC	4010-3960	1760	51,43	25
8200106■ ■	Morfi Small 8 Part In 30W 24V DC	5100-5050	1950	45	25
8200107■ ■	Morfi Small 8 Part Out 30W 24V DC	5100-5050	1970	45	25

CE | F | IP 40 | LED | 5 years WARRANTY | ta 25°C | 24VDC

- Aluminium body, painted electrostatically in selected colour.
- High efficient polycarbonate satin cover.
- With transparent cable 2x0,75mm² 2,5m.
- Rosette, driver 24V DC and suspensions not included.
- CRI: min. 80 / SDCM: 3
- Luminous Efficacy:
  140Lm/W at 4000 K
  133Lm/W at 3000 K

LED COLOUR CODES:	Colour Codes:
2 Warm 3 Neutral	0 Colours 1 White 2 Titan 3 Black

MORFI

MORFI MEDIUM PART

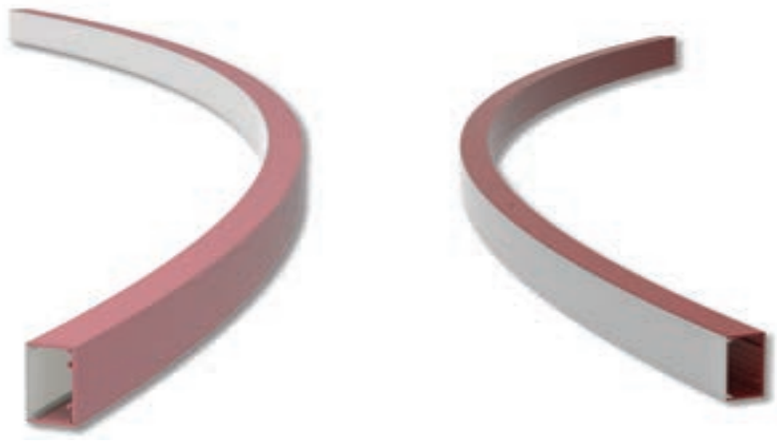

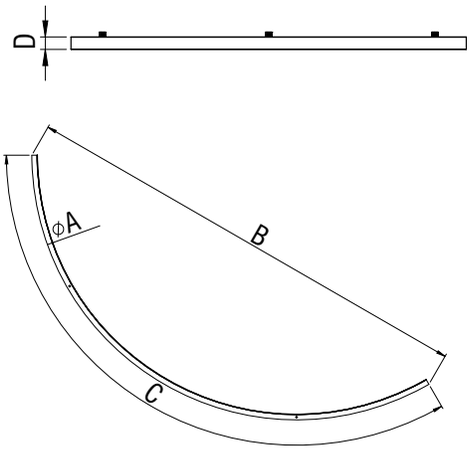

Code	Description	Dimensions mm			
		ØA	B	C(o)	D
8200110■	Morfi Medium 5 Part In 32W 24V DC	2010-1960	1740	120	48
8200111■	Morfi Medium 5 Part Out 30W 24V DC	1960-1910	1700	120	48
8200112■	Morfi Medium 6 Part In 29W 24V DC	3030-2980	1780	72	48
8200113■	Morfi Medium 6 Part Out 29W 24V DC	3080-3030	1810	72	48
8200114■	Morfi Medium 7 Part In 27W 24V DC	4020-3970	1745	51,43	48
8200115■	Morfi Medium 7 Part Out 27W 24V DC	4060-4010	1760	51,43	48
8200116■	Morfi Medium 8 Part In 30W 24V DC	5100-5050	1950	45	48
8200117■	Morfi Medium 8 Part Out 29W 24V DC	4890-4840	1780	45	48
8200120■	Morfi Medium 5 Part In2 63W 24V DC	2010-1960	1740	120	48
8200121■	Morfi Medium 5 Part Out2 60W 24V DC	1960-1910	1700	120	48
8200122■	Morfi Medium 6 Part In2 57W 24V DC	3030-2980	1780	72	48
8200123■	Morfi Medium 6 Part Out2 57W 24V DC	3080-3030	1810	72	48
8200124■	Morfi Medium 7 Part In2 54W 24V DC	4020-3970	1745	51,43	48
8200125■	Morfi Medium 7 Part Out2 54W 24V DC	4060-4010	1760	51,43	48
8200126■	Morfi Medium 8 Part In2 60W 24V DC	5100-5050	1950	45	48
8200127■	Morfi Medium 8 Part Out2 57W 24V DC	4890-4840	1780	45	48

CE | F | IP 40 | LED | 5 years WARRANTY | ta 25°C | 24VDC

- Aluminium body, painted electrostatically in selected colour.
- High efficient polycarbonate satin cover.
- With transparent cable 2x0,75mm^2 2,5m.
- Rosette, driver 24V DC and suspensions not included.
- CRI: min. 80 / SDCM: 3
- Luminous Efficacy:
  140Lm/W at 4000 K
  133Lm/W at 3000 K

LED COLOUR CODES: 2 Warm 3 Neutral

Colour Codes: 0 Colours 1 White 2 Titan 3 Black

MORFI

MORFI BIG PART

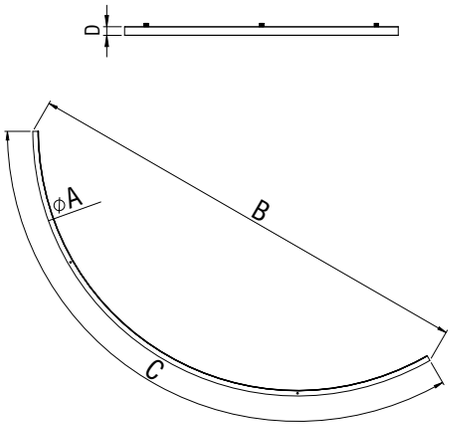

Code	Description	Dimensions mm			
		ØA	B	C(o)	D
8200130■ ■	Morfi Big 5 Part In 63W 24V DC	2010-1934	1740	120	68
8200131■ ■	Morfi Big 5 Part Out 60W 24V DC	1980-1904	1715	120	68
8200132■ ■	Morfi Big 6 Part In 54W 24V DC	3030-2954	1780	72	68
8200133■ ■	Morfi Big 6 Part Out 54W 24V DC	2930-2854	1720	72	68
8200134■ ■	Morfi Big 7 Part In 54W 24V DC	4020-3944	1745	51,43	68
8200135■ ■	Morfi Big 7 Part Out 54W 24V DC	4080-4004	1770	51,43	68
8200136■ ■	Morfi Big 8 Part In 60W 24V DC	5100-5024	1950	45	68
8200137■ ■	Morfi Big 8 Part Out 57W 24V DC	4910-4834	1880	45	68

CE | F | IP 40 | LED | 5 years WARRANTY | ta 25°C | 24VDC

- Aluminium body, painted electrostatically in selected colour.
- High efficient polycarbonate satin cover.
- With transparent cable 2x0,75mm² 2,5m.
- Rosette, driver 24V DC and suspensions not included.
- CRI: min. 80 / SDCM: 3
- Luminous Efficacy:
  140Lm/W at 4000 K
  133Lm/W at 3000 K

LED COLOUR CODES: 2 Warm 3 Neutral

Colour Codes: 0 Colours 1 White 2 Titan 3 Black

MORFI

MORFI ROSETTE AND SUSPENSION

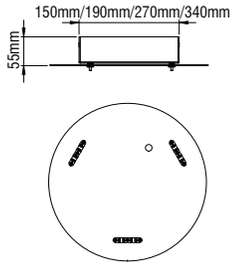

- For pendant use.
- Body from aluminium profile.
- Driver and suspensions not included.

Code	Description
82050■	Rosette ∅250
82051■	Rosette ∅300
82052■	Rosette ∅420
82053■	Rosette ∅500
900101	Single Suspension Morfi 1m (3 pieces needed)*
900103	Single Suspension Morfi 2m (3 pieces needed)*
900104	Single Suspension Morfi 3m (3 pieces needed)*
900105	Single Suspension Morfi 4m (3 pieces needed)*

* For installation at the rosette

Colour Codes:
0 Colours 1 White 2 Titan 3 Black

DRIVERS

Code	Description
800099	Driver 50W 24V DC
800098	Driver 100W 24V DC
800058	Driver 150W 24V DC
800088	Driver 320W 24V DC
800157	Driver 50W 350mA (only for HO version)
800158	Driver 65W 350mA (only for HO version)
800018	Driver 60W 24V DC Dimmer Dali / Push Button
800017	Driver 100W 24V DC Dimmer Dali / Push Button
800108	Driver 150W 24V DC Dimmer Dali / Push Button
800159	Driver 50W 350mA Dimmer Dali / Push Button (only for HO version)
800160	Driver 75W 350mA Dimmer Dali / Push Button (only for HO version)
800101	Driver 60W 24V DC Dimmer Phase cut
800102	Driver 100W 24V DC Dimmer Phase cut

ROSETTE AND DRIVER SELECTION

DESCRIPTION			ELECTRONIC		DIMMER		
MORFI IN/OUT	MORFI DOWN / UP	MORFI IN/OUT LO	ROSETTE/CODE	DRIVER/CODE	ROSETTE/CODE	DRIVER (Dali/Push Button) /Code	DRIVER (Phase Cut) /Code
Small 1 In/Out 30W	Small 1 Down/ Up 20W	Small 1 In/Out LO 20W	∅250/82050x	50W/800099	∅300/82051x	60W/800018	60W/800101
Small 2 In/Out 40W	Small 2 Down/ Up 25W	Small 2 In/Out LO 25W	∅250/82050x	50W/800099	∅300/82051x	60W/800018	60W/800101
	Small 3 Down/ Up 35W	Small 3 In/Out LO 35W	∅250/82050x	50W/800099	∅300/82051x	60W/800018	60W/800101
Small 3 In/Out 55W	Small 4 Down/ Up 46W	Small 4 In/Out LO 46W	∅250/82050x	100W/800098	∅300/82051x	60W/800018	60W/800101
Small 4 In/Out 70W			∅250/82050x	100W/800098	∅420/82052x	100W/800017	100W/800102
Medium 1 In/Out 30W			∅250/82050x	50W/800099	∅300/82051x	60W/800018	60W/800101
Medium 2 In/Out 40W		Medium 1 In2/ Out2 LO 40W	∅250/82050x	50W/800099	∅300/82051x	60W/800018	60W/800101
Medium 3 In/Out 55W		Medium 2 In2/ Out2 LO 50W	∅250/82050x	100W/800098	∅300/82051x	60W/800018	60W/800101
Medium 4 In/Out 70W		Medium 3 In2/ Out2 LO 70W	∅250/82050x	100W/800098	∅420/82052x	100W/800017	100W/800102
Medium 1 In2/Out2 60W			∅250/82050x	100W/800098	∅420/82052x	100W/800017	100W/800102
Medium 2 In2/Out2 80W	Medium 3 Down2/ Up2 70W		∅250/82050x	100W/800098	∅420/82052x	100W/800017	100W/800102
Medium 3 In2/Out2 105W	Medium 4 Down2/ Up2 95W	Medium 4 In2/ Out2 LO 95W	∅300/82051x	150W/800058	∅420/82052x	2x60W/2x800018	2x60W/2x800101
Medium 4 In2/Out2 140W			∅300/82051x	150W/800058	∅420/82052x	2x100W/2x800017	2x100W/2x800102
Big 2 In/Out 80W			∅250/82050x	100W/800098	∅420/82052x	100W/800017	100W/800102
Big 3 In/Out 105W			∅300/82051x	150W/800058	∅420/82052x	2x60W/2x800018	2x60W/2x800101
Big 4 In/Out 140W			∅300/82051x	150W/800058	∅420/82052x	2x100W/2x800017	2x100W/2x800102
Synthesis of Morfi			∅500/82053x	2x320W/2x800088	∅500/82053x	3x100W/3x800017	3x100W/3x800102
Synthesis of Morfi			∅500/82053x	2x320W/2x800088	∅500/82053x	2x100W+2x150W / 2x800017+2x800108	3x100W/3x800102

ROSETTE AND DRIVER SELECTION (for HO version)

DESCRIPTION	ELECTRONIC		DIMMER	
MORFI DOWN HO	ROSETTE/CODE	DRIVER/CODE	ROSETTE/CODE	DRIVER (Dali/Push Button) /Code
Medium 3 HO 94W	∅420/82052x	2x50W 350mA/2x800157	∅420/82052x	2x50W 350mA/2x800159
Medium 4 HO 125W	∅420/82052x	2x65W 350mA/2x800158	∅420/82052x	2x75W 350mA/2x800160

MORFI ROSETTE MASIF AND SUSPENSION

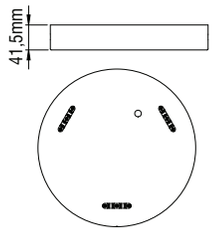

- For pendant use.
- Body from aluminium.
- Driver and suspensions not included.

Code	Description
82055■	Rosette Masif ∅260
82056■	Rosette Masif ∅300
82057■	Rosette Masif ∅430
900101	Single Suspension Morfi 1m (3 pieces needed)*
900103	Single Suspension Morfi 2m (3 pieces needed)*
900104	Single Suspension Morfi 3m (3 pieces needed)*
900105	Single Suspension Morfi 4m (3 pieces needed)*

* For installation at the rosette

Colour Codes:
0 Colours 1 White 2 Titan 3 Black

DRIVERS

Code	Description
800099	Driver 50W 24V DC
800098	Driver 100W 24V DC
800058	Driver 150W 24V DC
800088	Driver 320W 24V DC
800157	Driver 50W 350mA (only for HO version)
800158	Driver 65W 350mA (only for HO version)
800018	Driver 60W 24V DC Dimmer Dali / Push Button
800017	Driver 100W 24V DC Dimmer Dali / Push Button
800108	Driver 150W 24V DC Dimmer Dali / Push Button
800159	Driver 50W 350mA Dimmer Dali / Push Button (only for HO version)
800160	Driver 75W 350mA Dimmer Dali / Push Button (only for HO version)
800101	Driver 60W 24V DC Dimmer Phase cut
800102	Driver 100W 24V DC Dimmer Phase cut

ROSETTE MASIF AND DRIVER SELECTION

DESCRIPTION			ELECTRONIC		DIMMER		
MORFI IN/OUT	MORFI DOWN / UP	MORFI IN/OUT LO	ROSETTE/CODE	DRIVER/CODE	ROSETTE/CODE	DRIVER (Dali/Push Button) /Code	DRIVER (Phase Cut) /Code
Small 1 In/Out 30W	Small 1 Down/ Up 20W	Small 1 In/Out LO 20W	∅260/82055x	50W/800099	∅260/82055x	60W/800018	60W/800101
Small 2 In/Out 40W	Small 2 Down/ Up 25W	Small 2 In/Out LO 25W	∅260/82055x	50W/800099	∅260/82055x	60W/800018	60W/800101
	Small 3 Down/ Up 35W	Small 3 In/Out LO 35W	∅260/82055x	50W/800099	∅260/82055x	60W/800018	60W/800101
Small 3 In/Out 55W	Small 4 Down/ Up 46W	Small 4 In/Out LO 46W	∅260/82055x	100W/800098	∅260/82055x	60W/800018	60W/800101
Small 4 In/Out 70W			∅260/82055x	100W/800098	∅300/82056x	100W/800017	100W/800102
Medium 1 In/Out 30W			∅260/82055x	50W/800099	∅260/82055x	60W/800018	60W/800101
Medium 2 In/Out 40W		Medium 1 In2/ Out2 LO 40W	∅260/82055x	50W/800099	∅260/82055x	60W/800018	60W/800101
Medium 3 In/Out 55W		Medium 2 In2/ Out2 LO 50W	∅260/82055x	100W/800098	∅260/82055x	60W/800018	60W/800101
Medium 4 In/Out 70W		Medium 3 In2/ Out2 LO 70W	∅260/82055x	100W/800098	∅300/82056x	100W/800017	100W/800102
Medium 1 In2/Out2 60W			∅260/82055x	100W/800098	∅300/82056x	100W/800017	100W/800102
Medium 2 In2/Out2 80W	Medium 3 Down2/ Up2 70W		∅260/82055x	100W/800098	∅300/82056x	100W/800017	100W/800102
Medium 3 In2/Out2 105W	Medium 4 Down2/ Up2 95W	Medium 4 In2/ Out2 LO 95W	∅300/82056x	150W/800058	∅300/82056x	2x60W/2x800018	2x60W/2x800101
Medium 4 In2/Out2 140W			∅300/82056x	150W/800058	∅300/82056x	2x100W/2x800017	2x100W/2x800102
Big 2 In/Out 80W			∅260/82055x	100W/800098	∅300/82056x	100W/800017	100W/800102
Big 3 In/Out 105W			∅300/82056x	150W/800058	∅300/82056x	2x60W/2x800018	2x60W/2x800101
Big 4 In/Out 140W			∅300/82056x	150W/800058	∅300/82056x	2x100W/2x800017	2x100W/2x800102
Synthesis of Morfi			∅430/82057x	2x320W/2x800088	∅430/82057x	4x100W/4x800017	4x100W/4x800102
Synthesis of Morfi			∅430/82057x	2x320W/2x800088	∅430/82057x	4x150W/4x800108	4x100W/4x800102

ROSETTE AND DRIVER SELECTION (for HO version)

DESCRIPTION	ELECTRONIC		DIMMER	
MORFI DOWN HO	ROSETTE/CODE	DRIVER/CODE	ROSETTE/CODE	DRIVER (Dali/Push Button) /Code
Medium 3 HO 94W	∅430/82057x	2x50W 350mA/2x800157	∅430/82057x	2x50W 350mA/2x800159
Medium 4 HO 125W	∅430/82057x	2x65W 350mA/2x800158	∅430/82057x	2x75W 350mA/2x800160

MORFI

POWER SUPPLY

- For pendant use.
- Body from aluminium profile.

Code	Description	Kg
82067■	Rozette ∅80	0,100

SINGLE SUSPENSION

- For pendant use.

Code	Description
900112	Single Suspension 1m (3 pieces needed)*
900114	Single Suspension 2m (3 pieces needed)*
900116	Single Suspension 3m (3 pieces needed)*

* For installation at the ceiling

SURFACE BASE MORFI

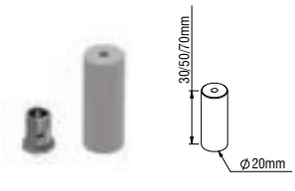

- Aluminium body.

Code	Description
82064■	Surface Base Morfi L30mm (3 pieces needed)*
82065■	Surface Base Morfi L50mm (3 pieces needed)*
82066■	Surface Base Morfi L70mm (3 pieces needed)*

* For surface installation of Morfi

Colour Codes:

0 Colours 1 White 2 Titan 3 Black

DRIVERS

Code	Description
800099	Driver 50W 24V DC
800098	Driver 100W 24V DC
800058	Driver 150W 24V DC
800088	Driver 320W 24V DC
800157	Driver 50W 350mA (only for HO version)
800158	Driver 65W 350mA (only for HO version)
800018	Driver 60W 24V DC Dimmer Dali / Push Button
800017	Driver 100W 24V DC Dimmer Dali / Push Button
800108	Driver 150W 24V DC Dimmer Dali / Push Button
800159	Driver 50W 350mA Dimmer Dali / Push Button (only for HO version)
800160	Driver 75W 350mA Dimmer Dali / Push Button (only for HO version)
800101	Driver 60W 24V DC Dimmer Phase cut
800102	Driver 100W 24V DC Dimmer Phase cut

MORFI

MORFI SMALL WAVE

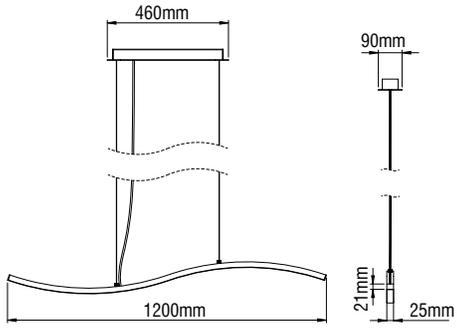

MORFI MEDIUM WAVE

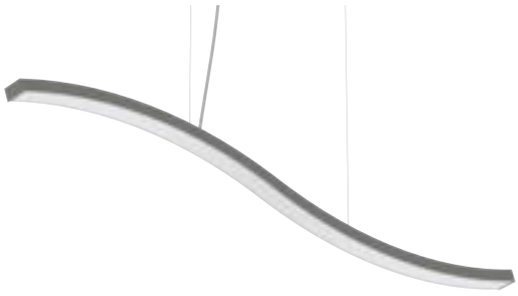

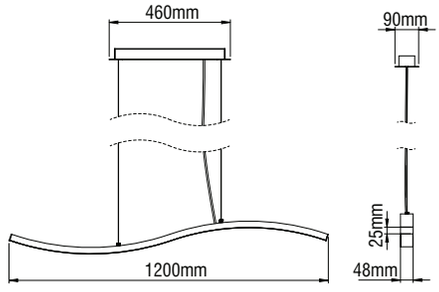

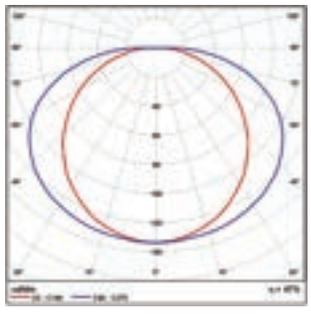

MORFI BIG WAVE

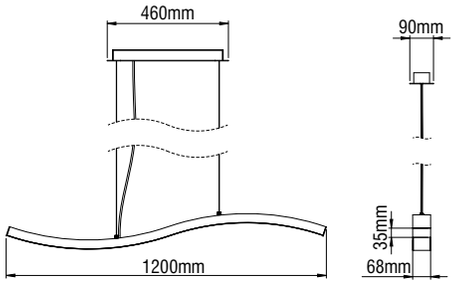

CE | F | IP 40 | LED | 5 years WARRANTY | ta 25°C | 24VDC

- Aluminium body, painted electrostatically in selected colour.
- High efficient polycarbonate satin cover.
- With transparent cable 2x0,75mm^2 2,5m.
- Rosette, driver 24V DC and suspensions 2m included.
- CRI: min. 80 / SDCM: 3
- Luminous Efficacy:
  140Lm/W at 4000 K
  133Lm/W at 3000 K

Code	Description
8200300■ ■	Morfi Small Linear Wave 18W 24V DC
8200310■ ■	Morfi Medium Linear Wave 18W 24V DC
8200320■ ■	Morfi Medium Linear Wave2 36W 24V DC
8200330■ ■	Morfi Big Linear Wave 36W 24V DC
8200400■ ■	Morfi Small Linear Wave 18W 24V DC Dimmer (Dali/Push Button)
8200410■ ■	Morfi Medium Linear Wave 18W 24V DC Dimmer (Dali/Push Button)
8200420■ ■	Morfi Medium Linear Wave2 36W 24V DC Dimmer (Dali/Push Button)
8200430■ ■	Morfi Big Linear Wave 36W 24V DC Dimmer (Dali/Push Button)
8200440■ ■	Morfi Small Linear Wave 18W 24V DC Dimmer (Phase Cut)
8200450■ ■	Morfi Medium Linear Wave 18W 24V DC Dimmer (Phase Cut)
8200460■ ■	Morfi Medium Linear Wave2 36W 24V DC Dimmer (Phase Cut)
8200470■ ■	Morfi Big Linear Wave 36W 24V DC Dimmer (Phase Cut)

LED COLOUR CODES: 2 Warm 3 Neutral

Colour Codes: 0 Colours 1 White 2 Titan 3 Black

MORFI

MORFI SMALL WAVE DOUBLE

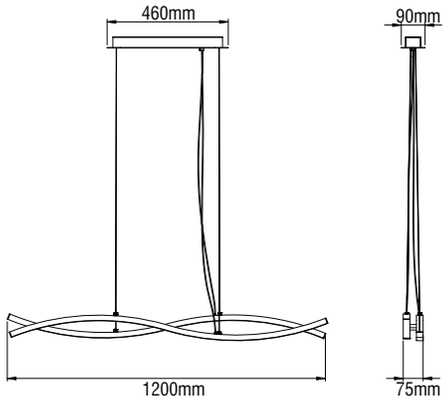

CE | F | IP 40 | LED | 5 years WARRANTY | ta 25°C | 24VDC

- Aluminium body, painted electrostatically in selected colour.
- High efficient polycarbonate satin cover.
- With transparent cable 2x0,75mm^2 2,5m.
- Rosette, driver 24V DC and suspensions 2m included.
- CRI: min. 80 / SDCM: 3
- Luminous Efficacy:
  140Lm/W at 4000 K
  133Lm/W at 3000 K

Code	Description
8200481■ ■	Morfi Small Linear Wave Double 36W 24V DC
8200482■ ■	Morfi Small Linear Wave Double 36W 24V DC Dimmer (Dali/Push Button)
8200483■ ■	Morfi Small Linear Wave Double 36W 24V DC Dimmer (Phase Cut)

LED COLOUR CODES: 2 Warm 3 Neutral

Colour Codes: 0 Colours 1 White 2 Titan 3 Black

MORFI WITH SPOTS

MORFI WITH SPOTS is not just a customised product with an innovative design, but also a working tool for the lighting designers and engineers.
It combines the aesthetic with the latest LED technological standards and meets the various needs of the customers in a bespoke way: it allows them to "think big" offering totally unexpected results even to large scale projects.

Technical Features

- Aluminium body, painted electrostatically in selected colour.
- For pendant installation.
- Connection for operation on 230V/50Hz.

Upon Request

- At special shapes and dimensions.

MORFI WITH SPOTS

MORFI WITH SPOTS

MORFI with SPOTS 3

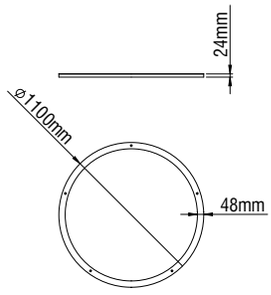

CE | F | IP 20

- Aluminium body.
- For pendant installation.

Code	Description
82041■	Morfi with Spots 3

MORFI with SPOTS 4

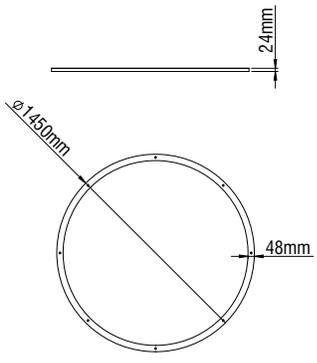

CE | F | IP 20

- Aluminium body.
- For pendant installation.

Code	Description
82042■	Morfi with Spots 4

MORFI with SPOTS PARTS

CE | F | IP 20

- Aluminium body.
- For pendant installation.

Code	Description
82043■	Morfi with Spots Part 1
82044■	Morfi with Spots Part 2
82045■	Morfi with Spots Part 3
82046■	Morfi with Spots Part 4

PART 1

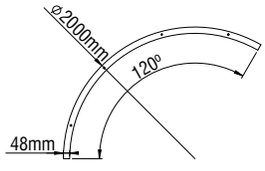

PART 2

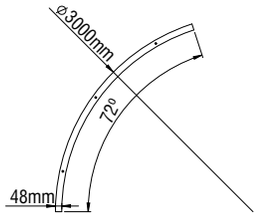

PART 3

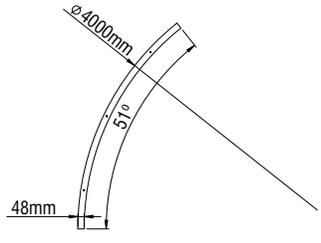

PART 4

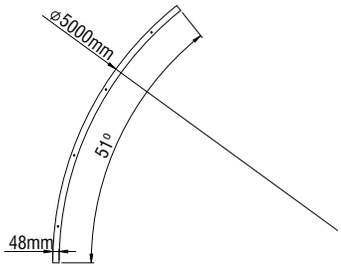

Colour Codes:
0 Colours | 1 White | 2 Titan | 3 Black

MORFI WITH SPOTS

CLUB 60 - GU10

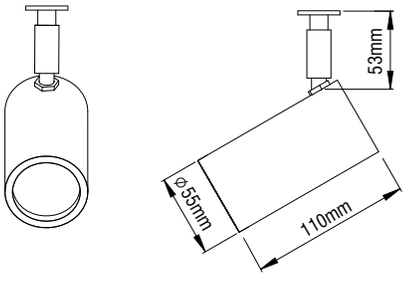

IP 20 | 40° | 350° | PAR 16 LED 50W GU10 | LED Lamp

- Version for LED PAR16/GU10.
- Aluminium body.
- With point outlet for surface-mounted installation.

Code	Description	Kg
89250	CLUB 60 Ceiling 1x max. 50W / GU10	0,350

CLUB 1 SHORT2 - LED

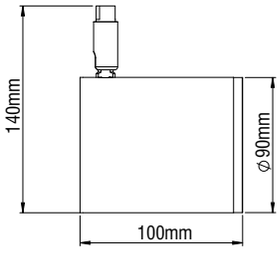

IP 20 | LED | 5 years WARRANTY | ta 25°C | 180° | 350°

- Version for LED CHIP.
- Aluminium body.
- High efficiency reflectors in Spot, Medium, Wide versions.
- Dimmer Phase Cut.
- CRI: min. 80 / SDCM: 3
- Luminous Efficacy:
  - 10W: 4000 K: 95 Lm/Watt
  - 10W: 3000 K: 90 Lm/Watt
  - 15W: 4000 K: 95 Lm/Watt
  - 15W: 3000 K: 90 Lm/Watt
  - 20W: 4000 K: 95 Lm/Watt
  - 20W: 3000 K: 90 Lm/Watt

Code	Description	Kg
89151	CLUB1 SHORT2 10W/230V	1,000
89161	CLUB1 SHORT2 15W/230V	1,000
89171	CLUB1 SHORT2 20W/230V	1,000

SPOT

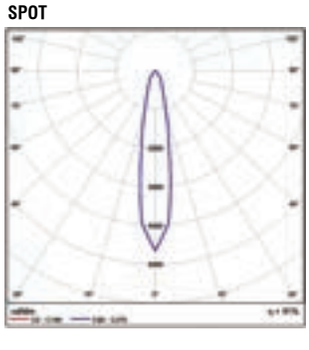

MEDIUM

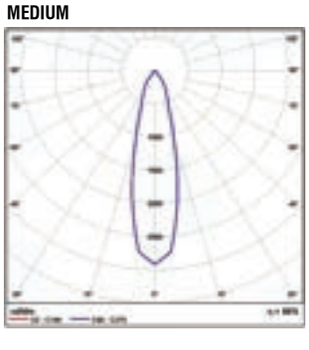

WIDE

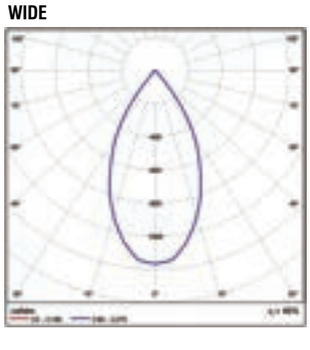

MORFI WITH SPOTS

CLUB 2 SHORT2 - LED

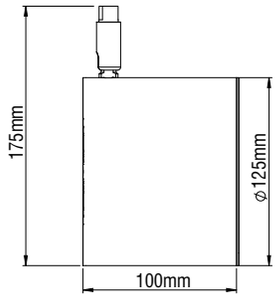

- Version for LED CHIP.
- Aluminium body.
- High efficiency reflectors in Spot, Medium, Wide versions.
- Passive cooling.
- Dimmer Phase Cut.
- CRI: min. 80 / SDCM: 3
- Luminous Efficacy:
  20W: 4000 K: 95 Lm/Watt
  20W: 3000 K: 90 Lm/Watt

Code	Description	Kg
89121	CLUB2 SHORT2 20W/230V	1,300

SPOT

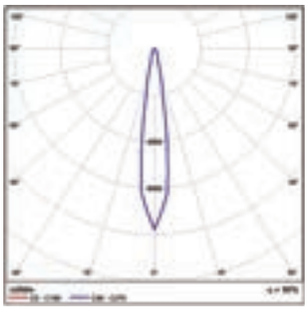

MEDIUM

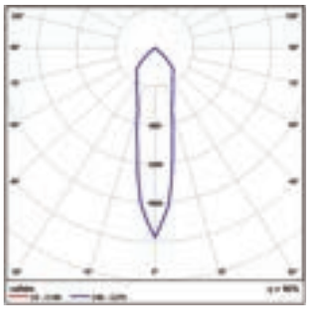

WIDE

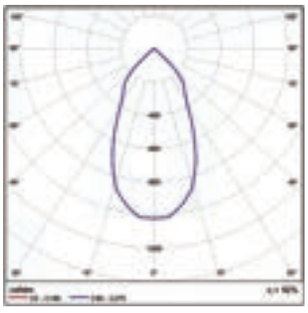

NANO 6 - PENDANT

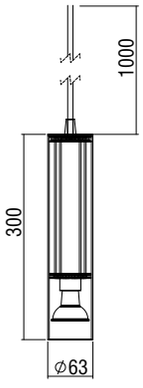

- Pendant version for PAR 16 LED GU10 lamp.
- Aluminium body.
- Inner plastic ring in black colour.
- 230V/50Hz.

Code	Description	Kg
88055	NANO 6 1x50W PAR16 LED GU10	0,750

MORFI WITH SPOTS

NANO 6 AS - PENDANT

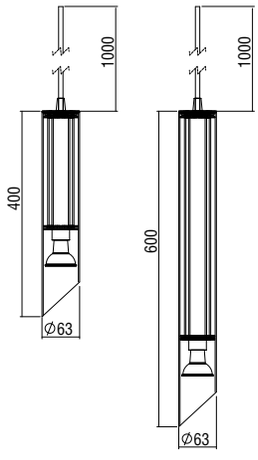

IP 20 | LED Lamp | 850°C | PAR 16 LED GU10

- Pendant version for PAR 16 LED GU10 lamp.
- Aluminium body in asymmetrical version.
- Inner plastic ring in black colour.
- Inner part in black colour (in standard version).
- 230V/50Hz.

Code	Description	Kg
88096	NANO 6 AS 1x50W PAR16 LED GU10 40cm	0,800
88097	NANO 6 AS 1x50W PAR16 LED GU10 60cm	0,900

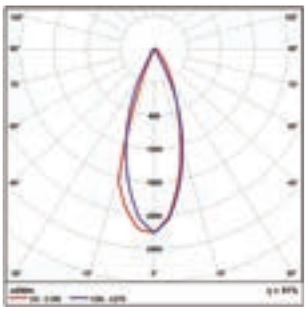

ROLLER 6 LED - PENDANT

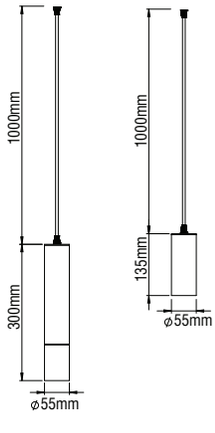

IP 20 | LED | 850°C | 5 years WARRANTY | ta 25°C

- Aluminium body, painted electrostatically in selected colour (inside and outside the same colour at standard version) or plated (inner part in black colour).
- 1m suspension cable, adjustable.
- Reflector in Medium, Wide versions.
- 8W power consumption driven at 350mA.
- CRI: min. 80 / SCDM: 3
- Luminous Efficacy:
  8W: 4000 K: 120 Lm/Watt
  8W: 3000 K: 114 Lm/Watt

Code	Description	Kg
88821	ROLLER 6 LED Pendant 8W 13,5cm	0,700
88828	ROLLER 6 LED Pendant 8W 30cm	1,000

MEDIUM

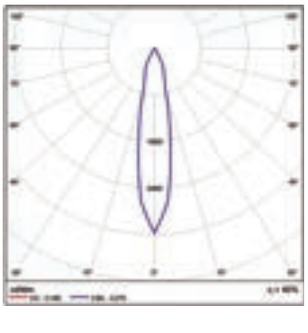

WIDE

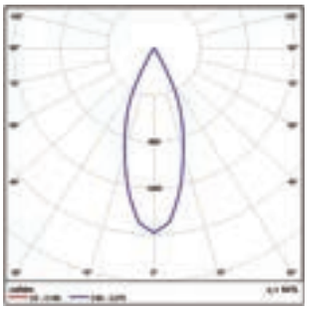

MORFI WITH SPOTS

MORFI ACCESSORIES

Code	Description
900112	Single Suspension 1m
900114	Single Suspension 2m
900116	Single Suspension 3m

POWER SUPPLY

- Body from aluminium profile.
- With transparent cable 3x0,75mm² or 5x0,50mm².
- Square or round version.

Code	Description	Kg
90042■	Power Supply 3x0,75mm² L 2m ∅80	0,130
90043■	Power Supply 3x0,75mm² L 2m ∅70	0,130
90044■	Power Supply 3x0,75mm² L 2m 80x80	0,210
90045■	Power Supply 3x0,75mm² L 2m 70x70	0,200
90048■	Power Supply 5x0,50mm² L 2m ∅100	0,250
90049■	Power Supply 5x0,50mm² L 2m 100x100	0,300

LED COLOUR CODES: 2 Warm 3 Neutral

BEAM CODES: 01 spot 02 medium 03 wide

Colour Codes: 0 Colours 1 White 2 Titan 3 Black 4 Chrome 5 matt Alum.

MORFI WITH SPOTS

RIM

RIM is not just a customised product with an innovative design, but also a working tool for the lighting designers and engineers. It combines the aesthetic with the latest LED technological standards and meets the various needs of the customers in a bespoke way: it allows them to "think big" offering totally unexpected results even to large scale projects.

Technical Features

- Aluminium body, painted electrostatically in selected colour.
- High efficient polycarbonate satin cover.
- Direct / Indirect illumination.
- Pure light without IR/UV radiation.
- Operation life: 50,000 hours with efficiency > 80% of the initial luminous flux (L80B10).
- Connection for operation on 230V/50Hz.

Upon Request

- At special shapes and dimensions.

RIM

RIM SMALL IN

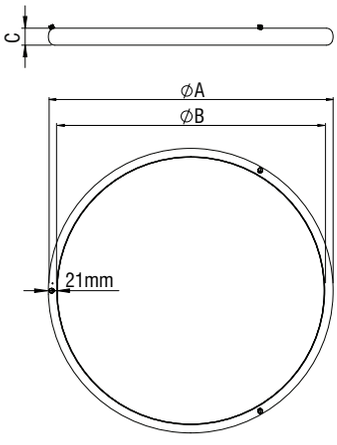

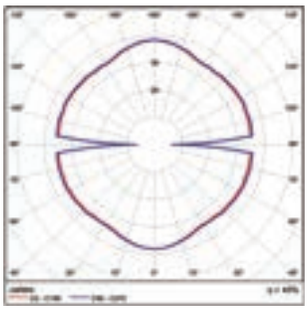

CE | F | IP 40 | LED | 5 years WARRANTY | ta 25°C | 24VDC

- Aluminium body, painted electrostatically in selected colour.
- High efficient polycarbonate satin cover.
- With transparent cable 2x0,75mm² 2,5m.
- Rosette, driver 24V DC and suspensions not included.
- CRI: min. 80 / SDCM: 3
- Luminous Efficacy:
  140Lm/W at 4000 K
  133Lm/W at 3000 K

Code	Description	Dimensions mm		
		ØA	ØB	C
8207000■	Rim Small 1 In 30W 24V DC	610	570	28
8207002■	Rim Small 2 In 40W 24V DC	805	765	28
8207004■	Rim Small 3 In 55W 24V DC	1090	1050	28
8207006■	Rim Small 4 In 70W 24V DC	1470	1430	28

RIM MEDIUM IN

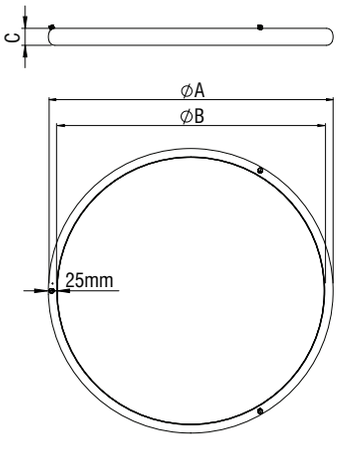

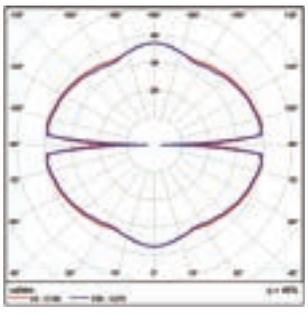

CE | F | IP 40 | LED | 5 years WARRANTY | ta 25°C | 24VDC

- Aluminium body, painted electrostatically in selected colour.
- High efficient polycarbonate satin cover.
- With transparent cable 2x0,75mm² 2,5m up to 80W and 4x0,75mm² 2,5m for more than 80W.
- Rosette, driver 24V DC and suspensions not included.
- CRI: min. 80 / SDCM: 3
- Luminous Efficacy:
  140Lm/W at 4000 K
  133Lm/W at 3000 K

Code	Description	Dimensions mm		
		ØA	ØB	C
8207010■	Rim Medium 1 In 30W 24V DC	610	560	48
8207012■	Rim Medium 2 In 40W 24V DC	805	755	48
8207014■	Rim Medium 3 In 55W 24V DC	1090	1040	48
8207016■	Rim Medium 4 In 70W 24V DC	1470	1420	48
8207020■	Rim Medium 1 In2 60W 24V DC	610	560	48
8207022■	Rim Medium 2 In2 80W 24V DC	805	755	48
8207024■	Rim Medium 3 In2 105W 24V DC	1090	1040	48
8207026■	Rim Medium 4 In2 140W 24V DC	1470	1420	48

LED COLOUR CODES: 2 Warm 3 Neutral

Colour Codes: 0 Colours 1 White 2 Titan 3 Black

RIM SMALL IN PART

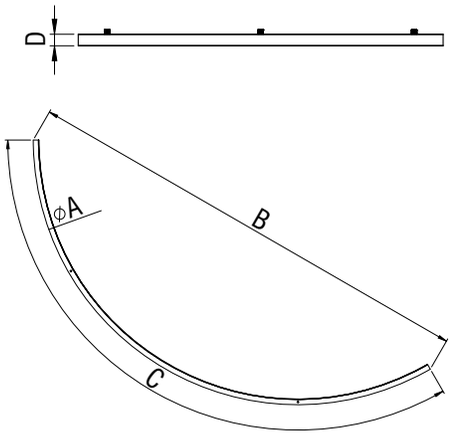

CE | F | IP 40 | LED | 5 years WARRANTY | ta 25°C | 24VDC

Code	Description	Dimensions mm ØA	B	C(o)	D
8207100■ ■	Rim Small 5 Part In 32W 24V DC	2010-1970	1740	120	28
8207102■ ■	Rim Small 6 Part In 29W 24V DC	3030-2990	1780	72	28
8207104■ ■	Rim Small 7 Part In 27W 24V DC	4020-3980	1745	51,43	28
8207106■ ■	Rim Small 8 Part In 30W 24V DC	5100-5060	1950	45	28

- Aluminium body, painted electrostatically in selected colour.
- High efficient polycarbonate satin cover.
- With transparent cable 2x0,75mm² 2,5m.
- Rosette, driver 24V DC and suspensions not included.
- CRI: min. 80 / SDCM: 3
- Luminous Efficacy:
  140Lm/W at 4000 K
  133Lm/W at 3000 K

RIM MEDIUM IN PART

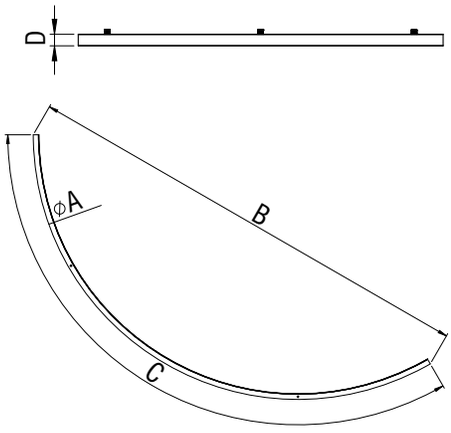

CE | F | IP 40 | LED | 5 years WARRANTY | ta 25°C | 24VDC

Code	Description	Dimensions mm ØA	B	C(o)	D
8207110■ ■	Rim Medium 5 Part In 32W 24V DC	2010-1960	1740	120	48
8207112■ ■	Rim Medium 6 Part In 29W 24V DC	3030-2980	1780	72	48
8207114■ ■	Rim Medium 7 Part In 27W 24V DC	4020-3970	1745	51,43	48
8207116■ ■	Rim Medium 8 Part In 30W 24V DC	5100-5050	1950	45	48
8207120■ ■	Rim Medium 5 Part In2 63W 24V DC	2010-1960	1740	120	48
8207122■ ■	Rim Medium 6 Part In2 57W 24V DC	3030-2980	1780	72	48
8207124■ ■	Rim Medium 7 Part In2 54W 24V DC	4020-3970	1745	51,43	48
8207126■ ■	Rim Medium 8 Part In2 60W 24V DC	5100-5050	1950	45	48

- Aluminium body, painted electrostatically in selected colour.
- High efficient polycarbonate satin cover.
- With transparent cable 2x0,75mm² 2,5m.
- Rosette, driver 24V DC and suspensions not included.
- CRI: min. 80 / SDCM: 3
- Luminous Efficacy:
  140Lm/W at 4000 K
  133Lm/W at 3000 K

LED COLOUR CODES: 2 Warm 3 Neutral

Colour Codes: 0 Colours 1 White 2 Titan 3 Black

RIM

RIM ROSETTE AND SUSPENSION

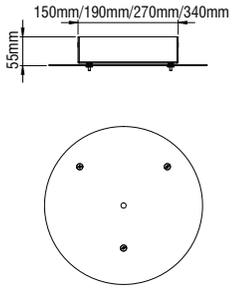

- For pendant use.
- Body from aluminium profile.
- Driver and suspensions not included.

Code	Description
82050■	Rosette 250
82051■	Rosette 300
82052■	Rosette 420
82053■	Rosette 500
900101	Single Suspension Morfi/Rim 1m (3 pieces needed)*
900103	Single Suspension Morfi/Rim 2m (3 pieces needed)*
900104	Single Suspension Morfi/Rim 3m (3 pieces needed)*
900105	Single Suspension Morfi/Rim 4m (3 pieces needed)*

* For installation at the rossete

Colour Codes:
0 Colours 1 White 2 Titan 3 Black

DRIVERS

Code.	Description
800099	Driver 50W 24V DC
800098	Driver 100W 24V DC
800058	Driver 150W 24V DC
800088	Driver 320W 24V DC
800018	Driver 60W 24V DC Dimmer Dali / Push Button
800017	Driver 100W 24V DC Dimmer Dali / Push Button
800108	Driver 150W 24V DC Dimmer Dali / Push Button
800101	Driver 60W 24V DC Dimmer Phase cut
800102	Driver 100W 24V DC Dimmer Phase cut

ROSETTE AND DRIVER SELECTION

DESCRIPTION	ELECTRONIC		DIMMER		
RIM IN	ROSETTE/CODE	DRIVER/CODE	ROSETTE/CODE	**DRIVER** (Dali/Push Button)	**DRIVER** (Phase Cut)
				/Code	/Code
Small 1 In/Out 30W	∅250/82050x	50W/800099	∅300/82051x	60W/800018	60W/800101
Small 2 In/Out 40W	∅250/82050x	50W/800099	∅300/82051x	60W/800018	60W/800101
Small 3 In/Out 55W	∅250/82050x	100W/800098	∅300/82051x	60W/800018	60W/800101
Small 4 In/Out 70W	∅250/82050x	100W/800098	∅420/82052x	100W/800017	100W/800102
Medium 1 In/Out 30W	∅250/82050x	50W/800099	∅300/82051x	60W/800018	60W/800101
Medium 2 In/Out 40W	∅250/82050x	50W/800099	∅300/82051x	60W/800018	60W/800101
Medium 3 In/Out 55W	∅250/82050x	100W/800098	∅300/82051x	60W/800018	60W/800101
Medium 4 In/Out 70W	∅250/82050x	100W/800098	∅420/82052x	100W/800017	100W/800102
Medium 1 In2/Out2 60W	∅250/82050x	100W/800098	∅300/82051x	60W/800018	60W/800101
Medium 2 In2/Out2 80W	∅250/82050x	100W/800098	∅420/82052x	100W/800017	100W/800102
Medium 3 In2/Out2 105W	∅300/82051x	150W/800058	∅420/82052x	2x60W/2x800018	2x60W/2x800101
Medium 4 In2/Out2 140W	∅300/82051x	150W/800058	∅420/82052x	2x100W/2x800017	2x100W/2x800102
Synthesis of Rim	∅500/82053x	2x320W/2x800088	∅500/82053x	3x100W/3x800017	3x100W/3x800102
Synthesis of Rim	∅500/82053x	2x320W/2x800088	∅500/82053x	2x100W+2x150W / 2x800017+2x800108	3x100W/3x800102

RIM

RIM ROSETTE MASIF AND SUSPENSION

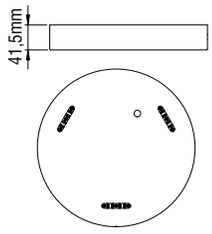

- For pendant use.
- Body from aluminium.
- Driver and suspensions not included.

Code	Description
82055■	Rosette Masif ∅260
82056■	Rosette Masif ∅300
82057■	Rosette Masif ∅430
900101	Single Suspension Morfi/Rim 1m (3 pieces needed)*
900103	Single Suspension Morfi/Rim 2m (3 pieces needed)*
900104	Single Suspension Morfi/Rim 3m (3 pieces needed)*
900105	Single Suspension Morfi/Rim 4m (3 pieces needed)*

* For installation at the rosette

Colour Codes:
0 Colours 1 White 2 Titan 3 Black

DRIVERS

Code.	Description
800099	Driver 50W 24V DC
800098	Driver 100W 24V DC
800058	Driver 150W 24V DC
800088	Driver 320W 24V DC
800018	Driver 60W 24V DC Dimmer Dali / Push Button
800017	Driver 100W 24V DC Dimmer Dali / Push Button
800108	Driver 150W 24V DC Dimmer Dali / Push Button
800101	Driver 60W 24V DC Dimmer Phase cut
800102	Driver 100W 24V DC Dimmer Phase cut

ROSETTE MASIF AND DRIVER SELECTION

DESCRIPTION	ELECTRONIC		DIMMER		
RIM IN	ROSETTE/CODE	DRIVER/CODE	ROSETTE/CODE	DRIVER (Dali/Push Button)	DRIVER (Phase Cut)
				/Code	/Code
Small 1 In/Out 30W	∅260/82055x	50W/800099	∅260/82055x	60W/800018	60W/800101
Small 2 In/Out 40W	∅260/82055x	50W/800099	∅260/82055x	60W/800018	60W/800101
Small 3 In/Out 55W	∅260/82055x	100W/800098	∅260/82055x	60W/800018	60W/800101
Small 4 In/Out 70W	∅260/82055x	100W/800098	∅300/82056x	100W/800017	100W/800102
Medium 1 In/Out 30W	∅260/82055x	50W/800099	∅260/82055x	60W/800018	60W/800101
Medium 2 In/Out 40W	∅260/82055x	50W/800099	∅260/82055x	60W/800018	60W/800101
Medium 3 In/Out 55W	∅260/82055x	100W/800098	∅260/82055x	60W/800018	60W/800101
Medium 4 In/Out 70W	∅260/82055x	100W/800098	∅300/82056x	100W/800017	100W/800102
Medium 1 In2/Out2 60W	∅260/82055x	100W/800098	∅260/82055x	60W/800018	60W/800101
Medium 2 In2/Out2 80W	∅260/82055x	100W/800098	∅300/82056x	100W/800017	100W/800102
Medium 3 In2/Out2 105W	∅300/82056x	150W/800058	∅300/82056x	2x60W/2x800018	2x60W/2x800101
Medium 4 In2/Out2 140W	∅300/82056x	150W/800058	∅300/82056x	2x100W/2x800017	2x100W/2x800102
Synthesis of Rim	∅430/82057x	2x320W/2x800088	∅430/82057x	4x100W/3x800017	4x100W/3x800102
Synthesis of Rim	∅430/82057x	2x320W/2x800088	∅430/82057x	4x150W/3x800108	4x100W/3x800102

RIM

POWER SUPPLY

- For pendant use.
- Body from aluminium profile.
- With transparent cable 3x0,75mm² or 5x0,50mm² for dimmer.
- Square or round version.

Code	Description	Kg
90042■	Power Supply 3x0,75mm² L 2m ∅80	0,130
90043■	Power Supply 3x0,75mm² L 2m ∅70	0,130
90044■	Power Supply 3x0,75mm² L 2m 80x80	0,210
90045■	Power Supply 3x0,75mm² L 2m 70x70	0,200
90048■	Power Supply 5x0,50mm² L 2m ∅100	0,250
90049■	Power Supply 5x0,50mm² L 2m 100x100	0,300

SINGLE SUSPENSION

- For pendant use.

Code	Description
900112	Single Suspension 1m (3 pieces needed)*
900114	Single Suspension 2m (3 pieces needed)*
900116	Single Suspension 3m (3 pieces needed)*

* For installation at the ceiling

SURFACE BASE MORFI / RIM

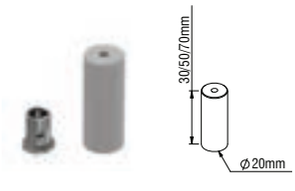

- Aluminium body.

Code	Description
82064■	Surface Base Morfi/Rim L30mm (3 pieces needed)*
82065■	Surface Base Morfi/Rim L50mm (3 pieces needed)*
82066■	Surface Base Morfi/Rim L70mm (3 pieces needed)*

* For surface installation of Morfi / Rim

Colour Codes:
0 Colours 1 White 2 Titan 3 Black

DRIVERS

Code.	Description
800099	Driver 50W 24V DC
800098	Driver 100W 24V DC
800058	Driver 150W 24V DC
800088	Driver 320W 24V DC
800018	Driver 60W 24V DC Dimmer Dali / Push Button
800017	Driver 100W 24V DC Dimmer Dali / Push Button
800108	Driver 150W 24V DC Dimmer Dali / Push Button
800101	Driver 60W 24V DC Dimmer Phase cut
800102	Driver 100W 24V DC Dimmer Phase cut

RIM WAVE SMALL

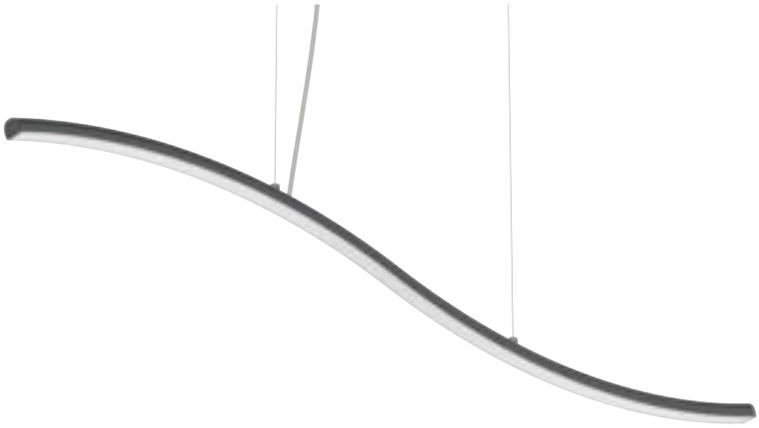

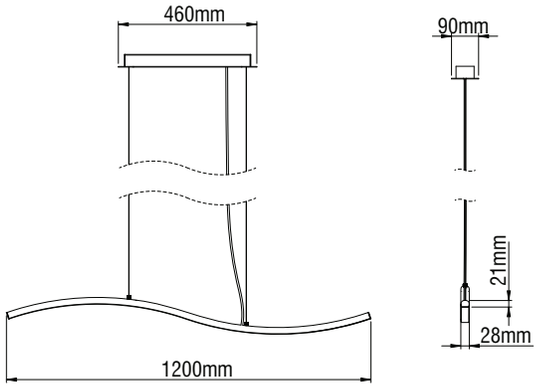

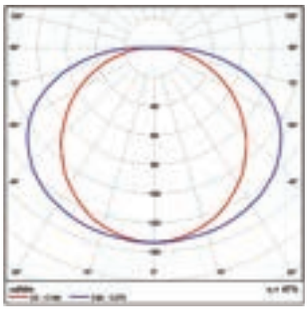

CE | F | IP 40 | LED | 5 years WARRANTY | ta 25ºC | 24VDC

Code	Description
8207300 ■ ■	Rim Small Linear Wave 18W 24V DC
8207400 ■ ■	Rim Small Linear Wave 18W 24V DC Dimmer (Dali/Push Button)
8207440 ■ ■	Rim Small Linear Wave 18W 24V DC Dimmer (Phase Cut)

- Aluminium body, painted electrostatically in selected colour.
- High efficient polycarbonate satin cover.
- With transparent cable 2x0,75mm² 2,5m.
- Rosette, driver 24V DC and suspensions 2m included.
- CRI: min. 80 / SDCM: 3
- Luminous Efficacy:
  140Lm/W at 4000 K
  133Lm/W at 3000 K

LED COLOUR CODES: 2 Warm 3 Neutral

Colour Codes: 0 Colours 1 White 2 Titan 3 Black

RIM

RIM WAVE MEDIUM

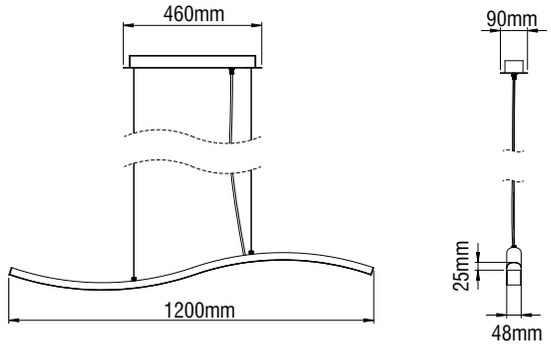

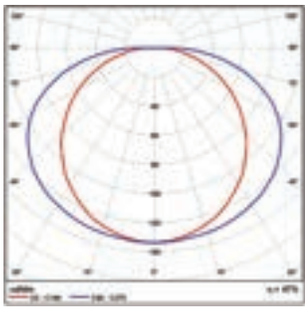

CE | F | IP 40 | LED | 5 years WARRANTY | ta 25ºC | 24VDC

- Aluminium body, painted electrostatically in selected colour.
- High efficient polycarbonate satin cover.
- With transparent cable 2x0,75mm² 2,5m.
- Rosette, driver 24V DC and suspensions 2m included.
- CRI: min. 80 / SDCM: 3
- Luminous Efficacy:
  140Lm/W at 4000 K
  133Lm/W at 3000 K

Code	Description
8207310■ ■	Rim Medium Linear Wave 18W 24V DC
8207320■ ■	Rim Medium Linear Wave2 36W 24V DC
8207410■ ■	Rim Medium Linear Wave 18W 24V DC Dimmer (Dali/Push Button)
8207420■ ■	Rim Medium Linear Wave2 36W 24V DC Dimmer (Dali/Push Button)
8207450■ ■	Rim Medium Linear Wave 18W 24V DC Dimmer (Phase Cut)
8207460■ ■	Rim Medium Linear Wave2 36W 24V DC Dimmer (Phase Cut)

LED COLOUR CODES: 2 Warm 3 Neutral

Colour Codes: 0 Colours 1 White 2 Titan 3 Black

ARETI

An extraordinary luminaire
for people with fascinating personality.
Designed to be the centerpiece of each room,
it emits a gentle diffuse light
thanks to its latest technological LED source.

Technical Features

- Aluminium body, painted electrostatically in selected colour.
- Steel mounting base.
- High efficient polycarbonate satin cover.
- Connection for operation with 230V/50Hz.

ARETI

ARETI 1 IN

ARETI 1 OUT

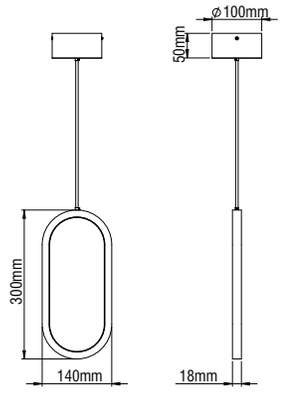

CE | F | IP 40 | LED | 5 years WARRANTY | ta 25°C | Included

- Aluminium body, painted electrostatically in selected colour.
- Power cable 1,5m included.
- CRI: min. 80 / SDCM: 3
- Luminous Efficacy:
  140Lm/W at 4000 K
  133Lm/W at 3000 K

Code	Description
8200632■■	Areti 1 IN 12W 24V DC
8200633■■	Areti 1 OUT 12W 24V DC

ARETI 2 IN

ARETI 2 OUT

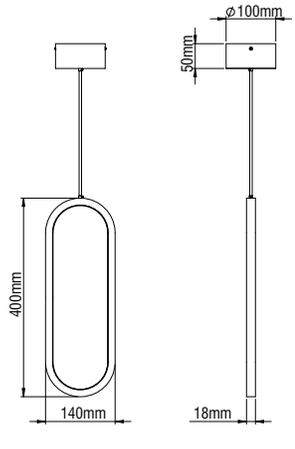

CE | F | IP 40 | LED | 5 years WARRANTY | ta 25°C | Included

- Aluminium body, painted electrostatically in selected colour.
- Power cable 1,5m included.
- CRI: min. 80 / SDCM: 3
- Luminous Efficacy:
  140Lm/W at 4000 K
  133Lm/W at 3000 K

Code	Description
8200634■■	Areti 2 IN 16W 24V DC
8200635■■	Areti 2 OUT 16W 24V DC

LED COLOUR CODES:	Colour Codes:
2 Warm 3 Neutral	0 Colours 1 White 2 Titan 3 Black

IRIDA

Technical Features
- Aluminium body.
- E14 lampholders.
- Power supply 1m included.

IRIDA

IRIDA SMALL

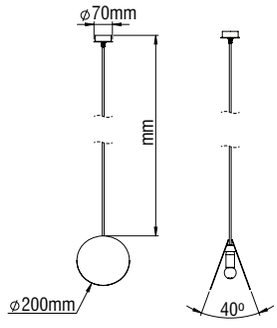

CE | F | IP **20** | **850**ºC

- Aluminium body.
- E14 lampholders.
- Power supply 1m included.
- 230V/50Hz.

Code	Description
85907	IRIDA Small ∅200 E14 *
85908	IRIDA Big ∅300 E14 *

* Led Lamps E14 not included

IRIDA BIG

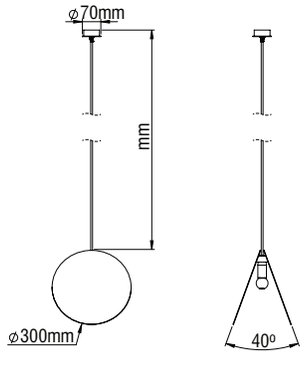

SLING

An extraordinary luminaire
for people with fascinating personality.
Designed to be the centerpiece of each room,
it emits a gentle diffuse light
thanks to its latest technological LED source.

Technical Features

- Aluminium body, painted electrostatically in selected colour.
- Steel mounting base.
- Supplied with one meter transparent cable.
- High efficient polycarbonate satin cover.
- Connection for operation with 230V/50Hz.

SLING

SLING MINI

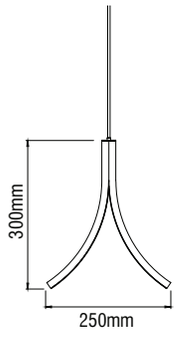

CE | F | IP 40 | 850°C | LED | 5 years WARRANTY | ta 25°C | Included

- Aluminium body.
- 230V/50Hz.
- CRI: min. 80 / SDCM: 3
- Luminous Efficacy:
  140Lm/W at 4000 K
  133Lm/W at 3000 K

Code	Description
82005272■	Sling Mini 8W Warm
82005273■	Sling Mini 8W Neutral

BE CAREFUL
Driver is placed out of the body.

SLING SMALL

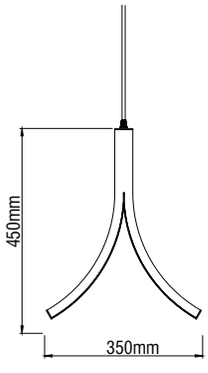

CE | F | IP 40 | 850°C | LED | 5 years WARRANTY | ta 25°C | Included

- Aluminium body.
- 230V/50Hz.
- CRI: min. 80 / SDCM: 3
- Luminous Efficacy:
  140Lm/W at 4000 K
  133Lm/W at 3000 K

Code	Description
82005302■	Sling Small 9W Warm
82005303■	Sling Small 9W Neutral

SLING MEDIUM

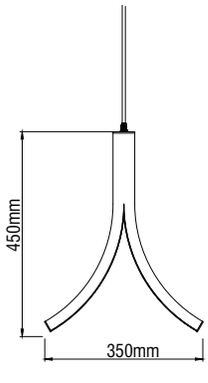

CE | F | IP 40 | 850°C | LED | 5 years WARRANTY | ta 25°C | Included

- Aluminium body.
- 230V/50Hz.
- CRI: min. 80 / SDCM: 3
- Luminous Efficacy:
  140Lm/W at 4000 K
  133Lm/W at 3000 K

Code	Description
82005312■	Sling Medium 18W Warm
82005313■	Sling Medium 18W Neutral

SLING

ROSETTE & TRACK

- Body from aluminium profile.

Code	Description
82060■	Rosette ∅70
82068■	Rosette ∅100 (it fits the driver for Sling Mini)
82061■	Track 950x40
82062■	Track 1200x40
82063■	Track 1600x40

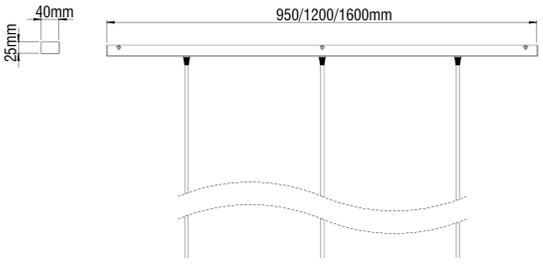

Colour Codes:
0 Colours 1 White 2 Titan 3 Black

YPSILON

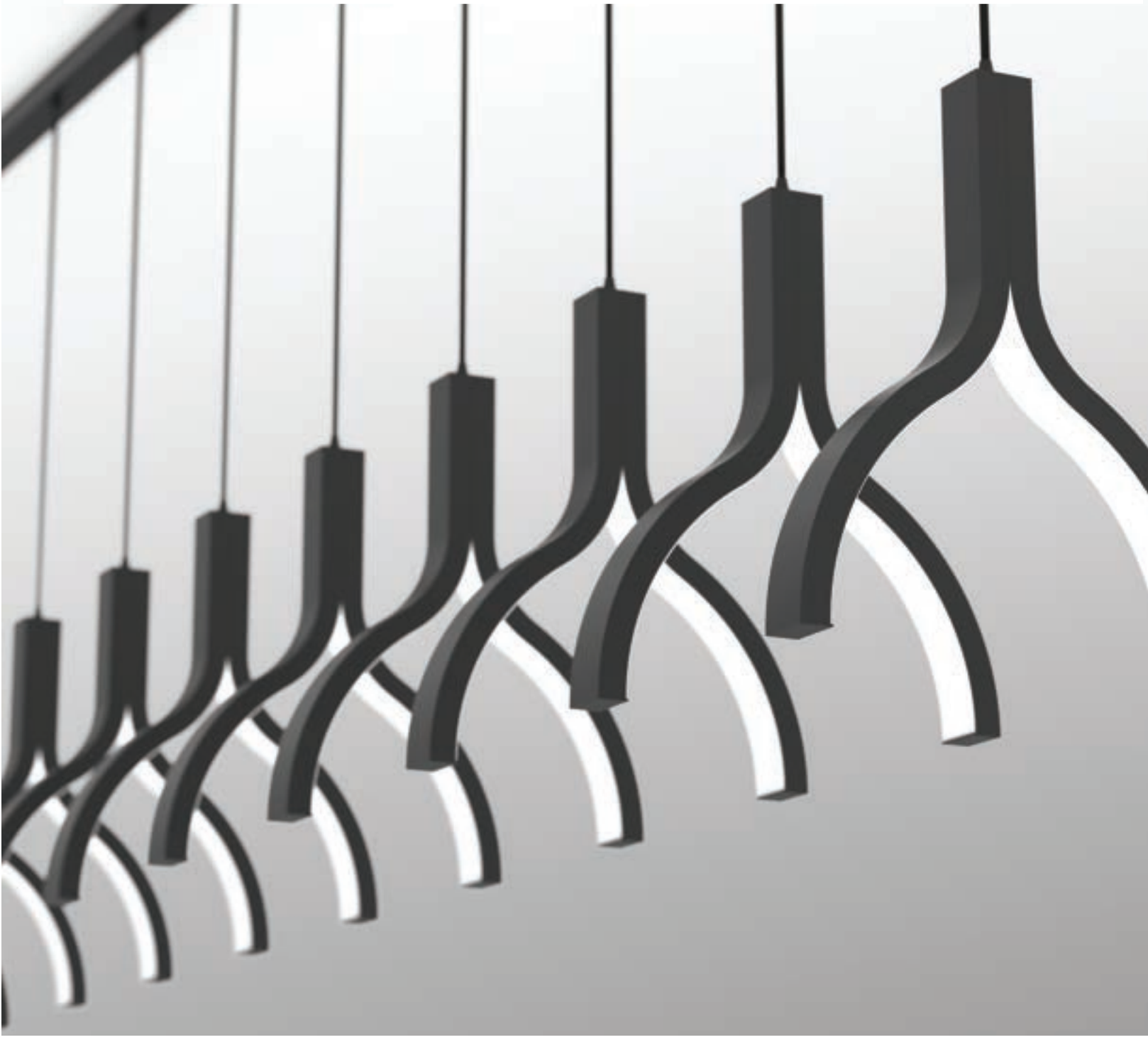

An extraordinary luminaire
for people with fascinating personality.
Designed to be the centerpiece of each room,
it emits a gentle diffuse light
thanks to its latest technological LED source.

Technical Features

- Aluminium body, painted electrostatically in selected colour.
- Steel mounting base.
- Supplied with one meter transparent cable.
- High efficient polycarbonate satin cover.
- Connection for operation with 230V/50Hz.

YPSILON

YPSILON SMALL

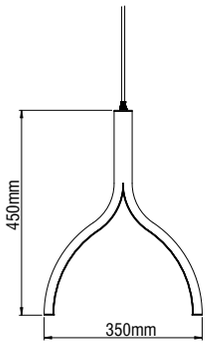

IP **40** | **850**°C | LED | 5 years WARRANTY | ta 25°C | Included

- Aluminium body.
- 230V/50Hz.
- CRI: min. 80 / SDCM: 3
- Luminous Efficacy:
  140Lm/W at 4000 K
  133Lm/W at 3000 K

Code	Description
82005102■	Ypsilon Small 12W Warm
82005103■	Ypsilon Small 12W Neutral

YPSILON MEDIUM

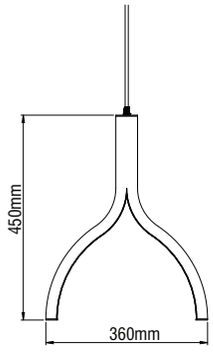

IP **40** | **850**°C | LED | 5 years WARRANTY | ta 25°C | Included

- Aluminium body.
- 230V/50Hz.
- CRI: min. 80 / SDCM: 3
- Luminous Efficacy:
  140Lm/W at 4000 K
  133Lm/W at 3000 K

Code	Description
82005112■	Ypsilon Medium 24W Warm
82005113■	Ypsilon Medium 24W Neutral

ROSETTE & TRACK

- Body from aluminium profile.

Code	Description
82060■	Rosette ∅70
82061■	Track 950x40
82062■	Track 1200x40
82063■	Track 1600x40

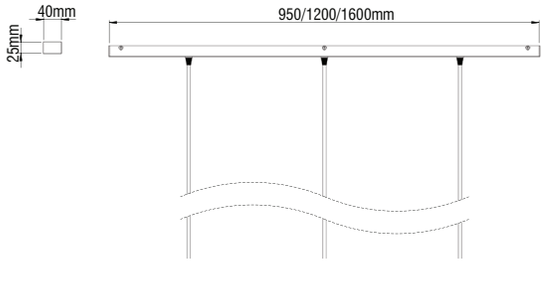

Colour Codes:
0 Colours | 1 White | 2 Titan | 3 Black

LATERN

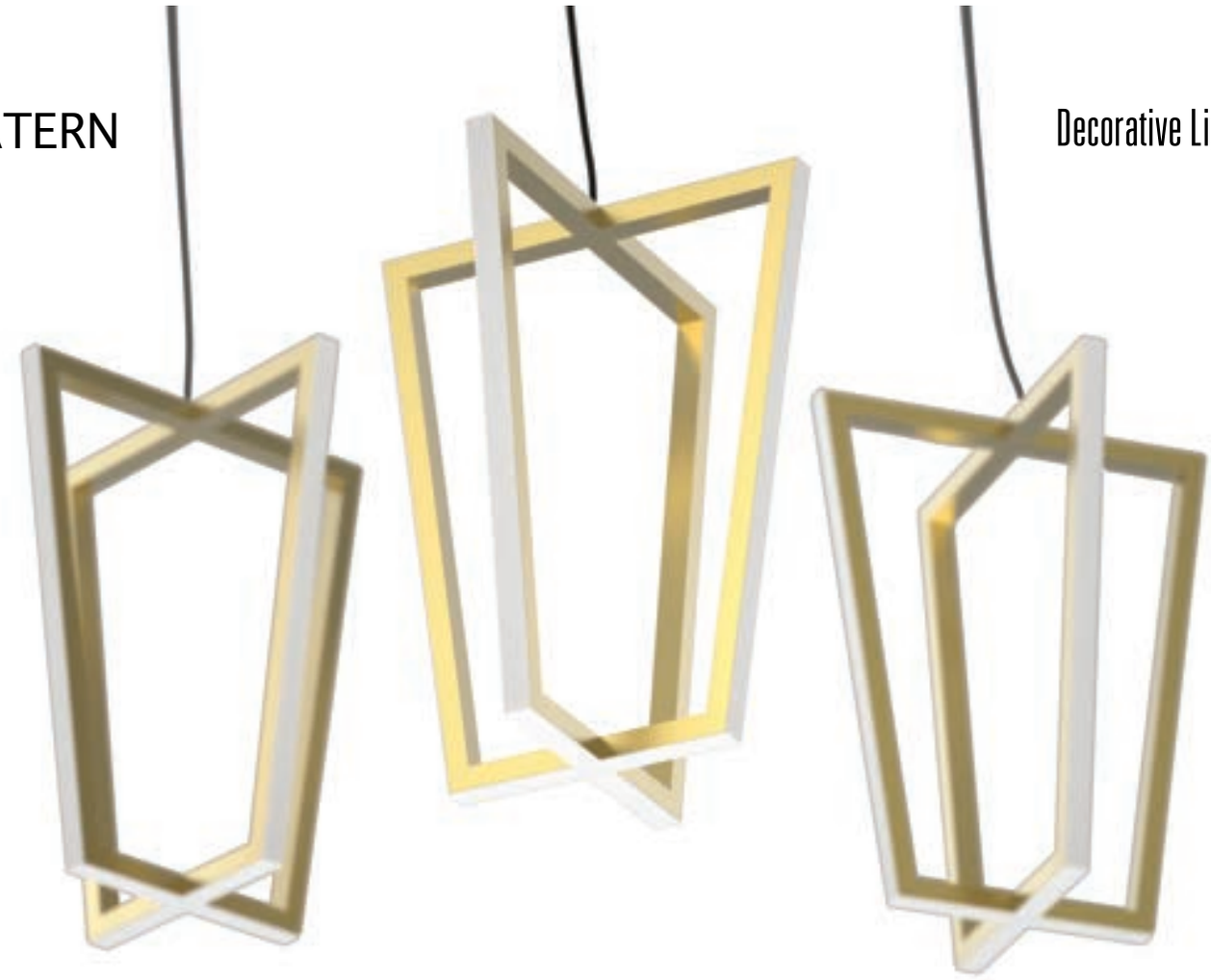

A luminaire with a contemporary design.
LATERN is a piece of architecture, perfect for adding stature to an area.
With it's gentle lighting, it upgrades areas such as lobbies, corridors, offices, stores and homes.

Technical Features

- Aluminium body, painted electrostatically in selected colour.
- High efficient polycarbonate satin cover.
- Connection for operation on 230V/50Hz.
- Power supply and suspensions 2m included

Upon Request

- At special dimensions.

CE | F | IP **40** | **LED** | years 5 WARRANTY | ta 25°C | Included

- Aluminium body, painted electrostatically in selected colour.
- With transparent cable 2x0,75mm^2 2m.
- Rosette, driver 24V DC and suspensions 2m included.
- CRI: min. 80 / SDCM: 3
- Luminous Efficacy:
  140Lm/W at 4000 K
  133Lm/W at 3000 K

Code	Description
85940■	Latern 45W 24V DC Warm
85941■	Latern 45W 24V DC Neutral
85942■	Latern 45W 24V DC Warm Dimmer (Dali/Push Button)
85943■	Latern 45W 24V DC Neutral Dimmer (Dali/Push Button)
85982■	Latern 45W 24V DC Warm Dimmer (Phase Cut)
85983■	Latern 45W 24V DC Neutral Dimmer (Phase Cut)

Colour Codes:
0 Colours 1 White 2 Titan 3 Black

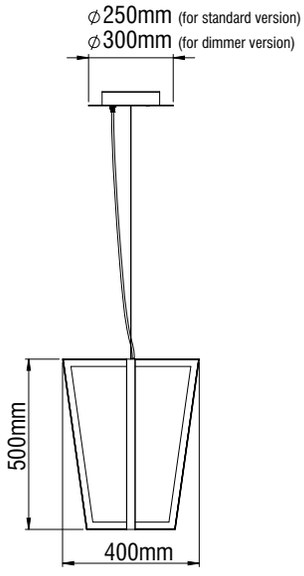

LOUPE

A luminaire with a contemporary design.
LOUPE is a piece of architecture, perfect for adding stature to an area.
With it's gentle lighting, it upgrades areas such as lobbies, corridors, offices, stores and homes.

Technical Features

- Aluminium body, painted electrostatically in selected colour.
- High efficient polycarbonate satin cover.
- Connection for operation on 230V/50Hz.

Upon Request

- At special dimensions.

CE | F | IP **40** | LED | 5 years WARRANTY | ta 25ºC | Included

- Aluminium body, painted electrostatically in selected colour.
- Rosette, driver 24V DC and power cable 1m included.
- CRI: min. 80 / SDCM: 3
- Luminous Efficacy:
  140Lm/W at 4000 K
  133Lm/W at 3000 K

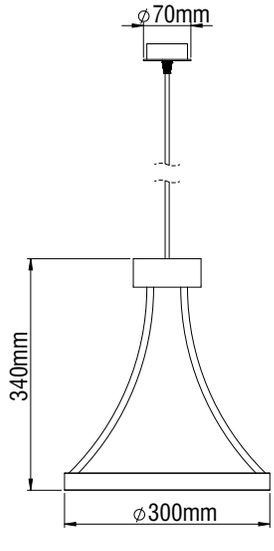

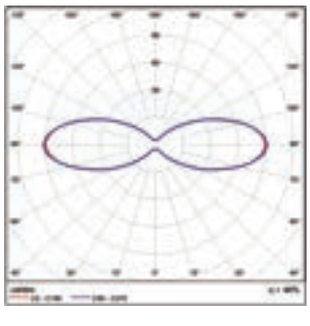

Code	Description
85950■	Loupe 15W 24V DC Warm
85951■	Loupe 15W 24V DC Neutral

Colour Codes:
0 Colours | 1 White | 2 Titan | 3 Black

MORFI BELL

MORFI is not just a customised product with an innovative design, but also a working tool for the lighting designers and engineers. It combines the aesthetic with the latest LED technological standards and meets the various needs of the customers in a bespoke way: it allows them to "think big" offering totally unexpected results even to large scale projects.

Technical Features

- Aluminium body, painted electrostatically in selected colour.
- High efficient polycarbonate satin cover.
- Direct / Indirect illumination.
- Pure light without IR/UV radiation.
- Operation life: 50,000 hours with efficiency > 80% of the initial luminous flux (L80B10).
- Connection for operation on 230V/50Hz.

Upon Request

- At special shapes and dimensions.
- Connection for operation on 230V-50/60Hz with dimmer dali or 1-10VDC ballast.

MORFI BELL

MORFI BELL ∅30 IN

MORFI BELL ∅30 OUT

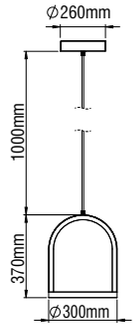

MORFI BELL ∅50 IN

MORFI BELL ∅50 OUT

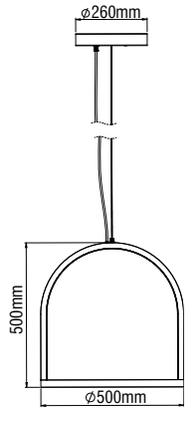

CE | F | IP 40 | LED | 5 years WARRANTY | ta 25°C | Included

- Aluminium body, painted electrostatically in selected colour.
- High efficient polycarbonate satin cover.
- With transparent cable 2x0,75mm² 1m.
- Rosette and driver 24V DC included.
- Suspensions 1m included (for ∅50 version).
- CRI: min. 80 / SDCM: 3
- Luminous Efficacy:
  140Lm/W at 4000 K
  133Lm/W at 3000 K

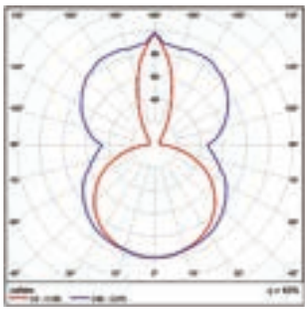

Code	Description
8200550■ ■	Morfi Bell ∅30 IN 27W 24V DC
8200551■ ■	Morfi Bell ∅30 OUT 27W 24V DC
8200552■ ■	Morfi Bell ∅50 IN 45W 24V DC
8200553■ ■	Morfi Bell ∅50 OUT 45W 24V DC
8200554■ ■	Morfi Bell ∅30 IN 27W 24V DC Dimmer (Dali/Push Button)
8200555■ ■	Morfi Bell ∅30 OUT 27W 24V DC Dimmer (Dali/Push Button)
8200556■ ■	Morfi Bell ∅50 IN 45W 24V DC Dimmer (Dali/Push Button)
8200557■ ■	Morfi Bell ∅50 OUT 45W 24V DC Dimmer (Dali/Push Button)
8200558■ ■	Morfi Bell ∅30 IN 27W 24V DC Dimmer (Phase Cut)
8200559■ ■	Morfi Bell ∅30 OUT 27W 24V DC Dimmer (Phase Cut)
8200560■ ■	Morfi Bell ∅50 IN 45W 24V DC Dimmer (Phase Cut)
8200561■ ■	Morfi Bell ∅50 OUT 45W 24V DC Dimmer (Phase Cut)

LED COLOUR CODES: 2 Warm 3 Neutral

Colour Codes: 0 Colours 1 White 2 Titan 3 Black

MORFI BELL

MORFI STICKS

A luminaire with a contemporary design.
MORFI STICKS is a piece of architecture, perfect for adding stature to an area.
With it's gentle lighting, it upgrades areas such as lobbies, corridors, offices, stores and homes.

Technical Features

- Aluminium body, painted electrostatically in selected colour.
- High efficient polycarbonate satin cover.
- Connection for operation on 230V/50Hz.
- Power supply and suspensions 1m included

Upon Request

- At special dimensions.

IP **40** | LED | 5 years WARRANTY | ta 25ºC | Included

- Aluminium body, painted electrostatically in selected colour.
- Rosette, driver 24V DC and suspensions 1m included.
- CRI: min. 80 / SDCM: 3
- Luminous Efficacy:
  140Lm/W at 4000 K
  133Lm/W at 3000 K

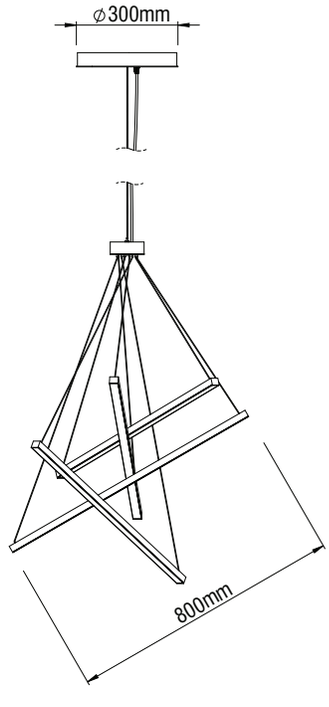

Code	Description
82005792■	Morfi Sticks 50W 24V DC LED Warm
82005793■	Morfi Sticks 50W 24V DC LED Neutral

For dimmer version add letter **"D"** at the end of product code.

Colour Codes:
0 Colours | 1 White | 2 Titan | 3 Black

IOLI SMALL RIM

A luminaire with a contemporary design.
IOLI SMALL RIM is a piece of architecture,
perfect for adding stature to an area.
With it's gentle lighting, it upgrades areas such as lobbies,
corridors, offices, stores and homes.

Technical Features

- Aluminium body, painted electrostatically in selected colour.
- High efficient polycarbonate satin cover.
- Connection for operation on 230V/50Hz.
- Power supply and suspensions 2m included

Upon Request

- At special dimensions.

CE | F | IP **40** | LED | years 5 WARRANTY | ta 25ºC | Included

- Aluminium body, painted electrostatically in selected colour.
- Rosette, driver 24V DC and suspensions 2m included.
- CRI: min. 80 / SDCM: 3
- Luminous Efficacy:
  140Lm/W at 4000 K
  133Lm/W at 3000 K

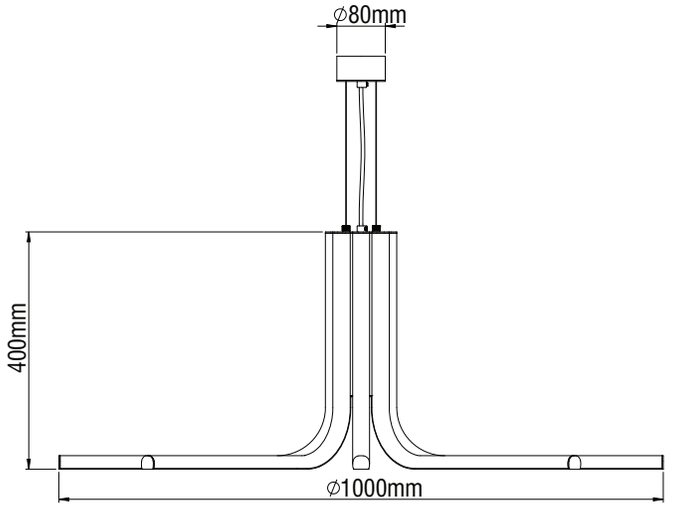

Code	Description
82007272■	Ioli Small Rim 60W 24V DC Warm
82007273■	Ioli Small Rim 60W 24V DC Neutral
82007282■	Ioli Small Rim 60W 24V DC Warm Dimmer (Dali/Push Button)
82007283■	Ioli Small Rim 60W 24V DC Neutral Dimmer (Dali/Push Button)
82007292■	Ioli Small Rim 60W 24V DC Warm Dimmer (Phase Cut)
82007293■	Ioli Small Rim 60W 24V DC Neutral Dimmer (Phase Cut)

Colour Codes:
0 Colours 1 White 2 Titan 3 Black

IOLI MINI

A luminaire with a contemporary design.
IOLI MINI is a piece of architecture,
perfect for adding stature to an area.
With it's gentle lighting, it upgrades areas such as lobbies,
corridors, offices, stores and homes.

Technical Features

- Aluminium body, painted electrostatically in selected colour.
- High efficient polycarbonate satin cover.
- Connection for operation on 230V/50Hz.
- Power supply and suspensions 2m included

Upon Request

- At special dimensions.

IP **40** | LED | 5 years WARRANTY | ta 25ºC | Included

- Aluminium body, painted electrostatically in selected colour.
- Rosette, driver 24V DC and suspensions 2m included.
- CRI: min. 80 / SDCM: 3
- Luminous Efficacy:
  140Lm/W at 4000 K
  133Lm/W at 3000 K

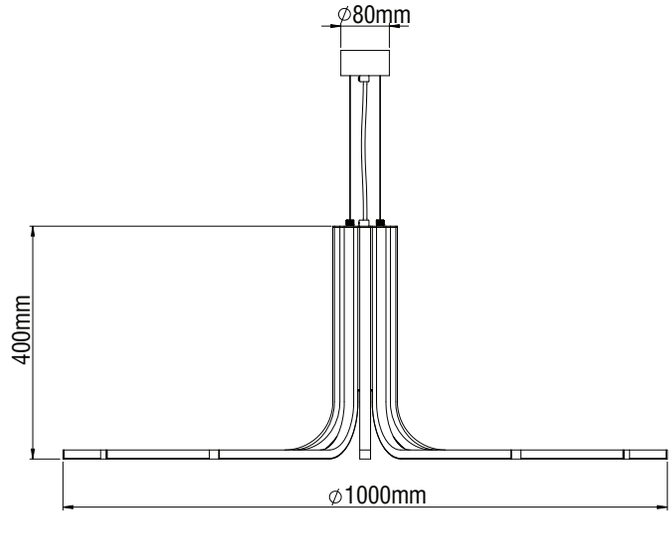

Code	Description
82007302■	Ioli Mini 95W 24V DC Warm
82007303■	Ioli Mini 95W 24V DC Neutral
82007312■	Ioli Mini 95W 24V DC Warm Dimmer (Dali/Push Button)
82007313■	Ioli Mini 95W 24V DC Neutral Dimmer (Dali/Push Button)
82007322■	Ioli Mini 95W 24V DC Warm Dimmer (Phase Cut)
82007323■	Ioli Mini 95W 24V DC Neutral Dimmer (Phase Cut)

Colour Codes:
0 Colours | 1 White | 2 Titan | 3 Black

AFRODITE

A luminaire with a contemporary design.
AFRODITE is a piece of architecture, perfect for adding stature to an area.
With it's gentle lighting, it upgrades areas such as lobbies, corridors, offices, stores and homes.

Technical Features

- Aluminium body, painted electrostatically in selected colour.
- High efficient polycarbonate satin cover.
- Connection for operation on 230V/50Hz.
- Power supply and suspensions 2m included

Upon Request

- At special dimensions.

AFRODITE

AFRODITI MINI

IP 40 | LED | 5 years WARRANTY | ta 25ºC | Included

- Aluminium body, painted electrostatically in selected colour.
- With transparent cable 2x0,75mm² 2m.
- Rosette, driver 24V DC and suspensions 2m included.
- CRI: min. 80 / SDCM: 3
- Luminous Efficacy:
  140Lm/W at 4000 K
  133Lm/W at 3000 K

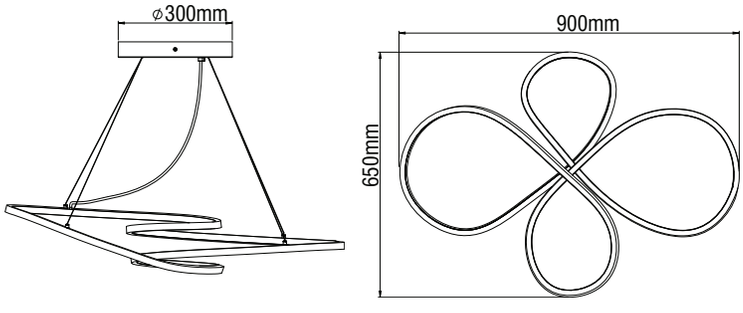

Code	Description
82007122■	Afrodite Mini 63W 24V DC Warm
82007123■	Afrodite Mini 63W 24V DC Neutral
82007132■	Afrodite Mini 63W 24V DC Warm Dimmer (Dali/Push Button)
82007133■	Afrodite Mini 63W 24V DC Neutral Dimmer (Dali/Push Button)
82007142■	Afrodite Mini 63W 24V DC Warm Dimmer (Phase Cut)
82007143■	Afrodite Mini 63W 24V DC Neutral Dimmer (Phase Cut)

AFRODITI

IP 40 | LED | 5 years WARRANTY | ta 25ºC | Included

- Aluminium body, painted electrostatically in selected colour.
- With transparent cable 2x0,75mm² 2m.
- Rosette, driver 24V DC and suspensions 2m included.
- CRI: min. 80 / SDCM: 3
- Luminous Efficacy:
  140Lm/W at 4000 K
  133Lm/W at 3000 K

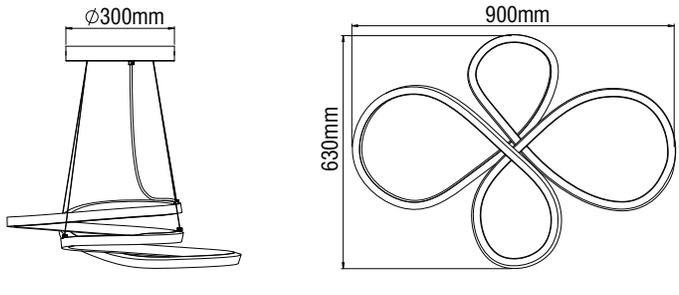

Code	Description
82007092■	Afrodite 63W 24V DC Warm
82007093■	Afrodite 63W 24V DC Neutral
82007102■	Afrodite 63W 24V DC Warm Dimmer (Dali/Push Button)
82007103■	Afrodite 63W 24V DC Neutral Dimmer (Dali/Push Button)
82007112■	Afrodite 63W 24V DC Warm Dimmer (Phase Cut)
82007113■	Afrodite 63W 24V DC Neutral Dimmer (Phase Cut)

Colour Codes:
0 Colours | 1 White | 2 Titan | 3 Black

FOURO

A luminaire with a contemporary design.
FOURO is a piece of architecture, perfect for adding stature to an area.
With it's gentle lighting, it upgrades areas such as lobbies, corridors, offices, stores and homes.

Technical Features

- Aluminium body, painted electrostatically in selected colour.
- High efficient polycarbonate satin cover.
- Connection for operation on 230V/50Hz.
- Power supply and suspensions 2m included

Upon Request

- At special dimensions.

- Aluminium body, painted electrostatically in selected colour.
- With transparent cable 2x0,75mm² 2m.
- Rosette, driver 24V DC and suspensions 2m included.
- CRI: min. 80 / SDCM: 3
- Luminous Efficacy:
  140Lm/W at 4000 K
  133Lm/W at 3000 K

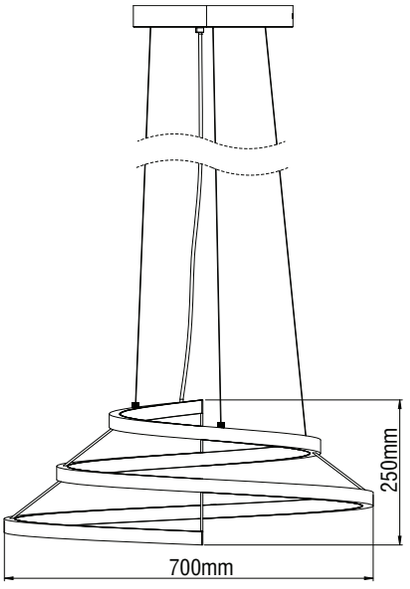

Code	Description
82007042■	Fouro 72W 24V DC Warm
82007043■	Fouro 72W 24V DC Neutral
82007052■	Fouro 72W 24V DC Warm Dimmer (Dali/Push Button)
82007053■	Fouro 72W 24V DC Neutral Dimmer (Dali/Push Button)
82007062■	Fouro 72W 24V DC Warm Dimmer (Phase Cut)
82007063■	Fouro 72W 24V DC Neutral Dimmer (Phase Cut)

Colour Codes:
0 Colours 1 White 2 Titan 3 Black

ELEA

A luminaire with a contemporary design.
ELEA is a piece of architecture, perfect for adding stature to an area.
With it's gentle lighting, it upgrades areas such as lobbies, corridors, offices, stores and homes.

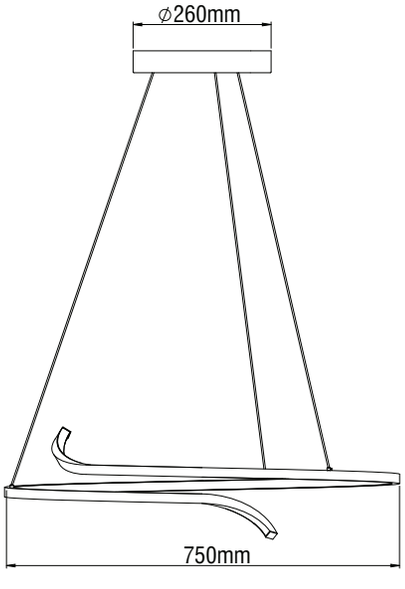

Technical Features

- Aluminium body, painted electrostatically in selected colour.
- High efficient polycarbonate satin cover.
- Connection for operation on 230V/50Hz.
- Power supply and suspensions 2m included

Upon Request

- At special dimensions.

CE | F | IP **40** | LED | 5 years WARRANTY | ta 25ºC | Included

- Aluminium body, painted electrostatically in selected colour.
- With transparent cable 2x0,75mm^2 2m.
- Rosette, driver 24V DC and suspensions 2m included.
- CRI: min. 80 / SDCM: 3
- Luminous Efficacy:
  140Lm/W at 4000 K
  133Lm/W at 3000 K

Code	Description
82007372■	Elea 50W 24V DC Warm
82007373■	Elea 50W 24V DC Neutral
82007382■	Elea 50W 24V DC Warm Dimmer (Dali/Push Button)
82007383■	Elea 50W 24V DC Neutral Dimmer (Dali/Push Button)
82007392■	Elea 50W 24V DC Warm Dimmer (Phase Cut)
82007393■	Elea 50W 24V DC Neutral Dimmer (Phase Cut)

Colour Codes:
0 Colours | 1 White | 2 Titan | 3 Black

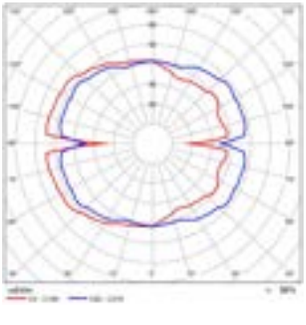

ANCORA

A luminaire with a contemporary design.
ANCORA is a piece of architecture, perfect for adding stature to an area.
With it's gentle lighting, it upgrades areas such as lobbies, corridors, offices, stores and homes.

Technical Features

- Aluminium body, painted electrostatically in selected colour.
- High efficient polycarbonate satin cover.
- Connection for operation on 230V/50Hz.
- Power supply and suspensions 2m included

Upon Request

- At special dimensions.

CE | F | IP **40** | LED | 5 years WARRANTY | ta 25°C | Included

- Aluminium body, painted electrostatically in selected colour.
- Rosette, driver 24V DC and suspensions 2m included.
- CRI: min. 80 / SDCM: 3
- Luminous Efficacy:
  140Lm/W at 4000 K
  133Lm/W at 3000 K

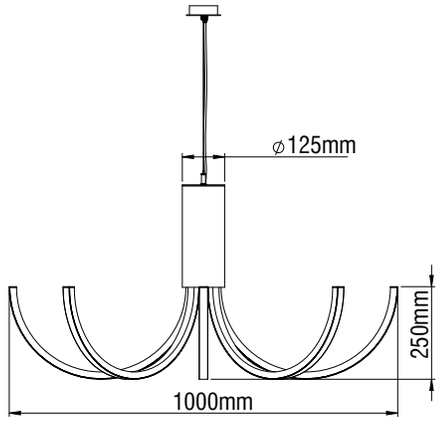

Code	Description
85945■	Ancora 70W 24V DC Warm
85946■	Ancora 70W 24V DC Neutral
85947■	Ancora 70W 24V DC Warm Dimmer (Dali/Push Button)
85948■	Ancora 70W 24V DC Neutral Dimmer (Dali/Push Button)
85984■	Ancora 70W 24V DC Warm Dimmer (Phase Cut)
85985■	Ancora 70W 24V DC Neutral Dimmer (Phase Cut)

Colour Codes:
0 Colours 1 White 2 Titan 3 Black

DALIDA

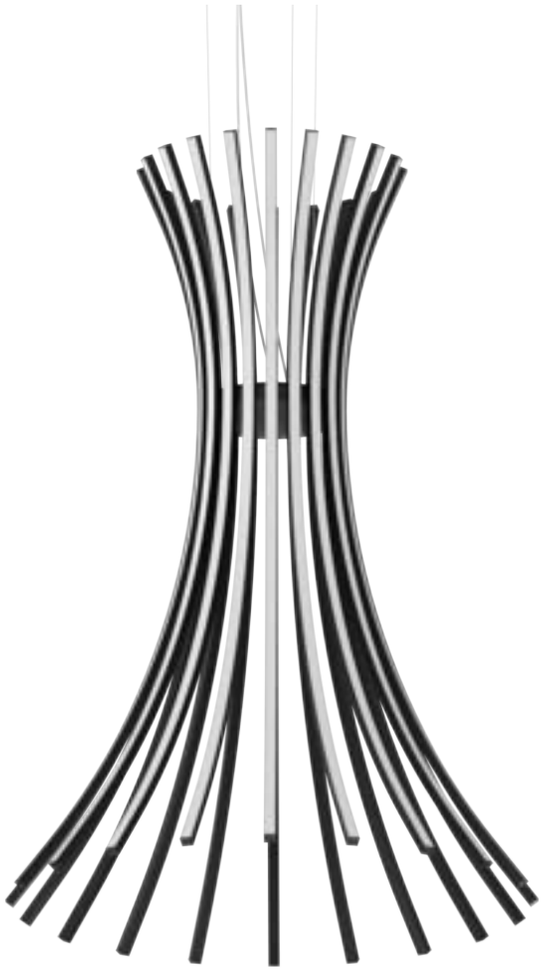

A luminaire with a contemporary design.
DALIDA is a piece of architecture,
perfect for adding stature to an area.
With it's gentle lighting, it upgrades areas such as lobbies,
corridors, offices, stores and homes.

Technical Features

- Aluminium body, painted electrostatically in selected colour.
- High efficient polycarbonate satin cover.
- Connection for operation on 230V/50Hz.
- Power supply and suspensions 2m included

Upon Request

- At special dimensions.

IP **40** | LED | years 5 WARRANTY | ta 25ºC | Included

- Aluminium body, painted electrostatically in selected colour.
- Rosette, driver 24V DC and suspensions 2m included.
- CRI: min. 80 / SDCM: 3
- Luminous Efficacy:
  140Lm/W at 4000 K
  133Lm/W at 3000 K

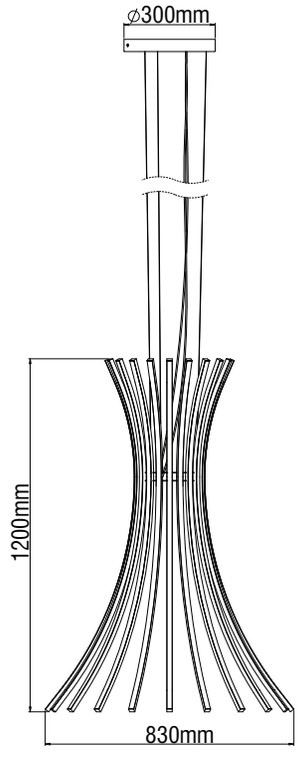

Code	Description
82007332■	Dalida 280W 24V DC Warm
82007333■	Dalida 280W 24V DC Neutral
82007342■	Dalida 280W 24V DC Warm Dimmer (Dali/Push Button)
82007343■	Dalida 280W 24V DC Neutral Dimmer (Dali/Push Button)
82007352■	Dalida 280W 24V DC Warm Dimmer (Phase Cut)
82007353■	Dalida 280W 24V DC Neutral Dimmer (Phase Cut)

Colour Codes:
0 Colours 1 White 2 Titan 3 Black

MORFI LINKS

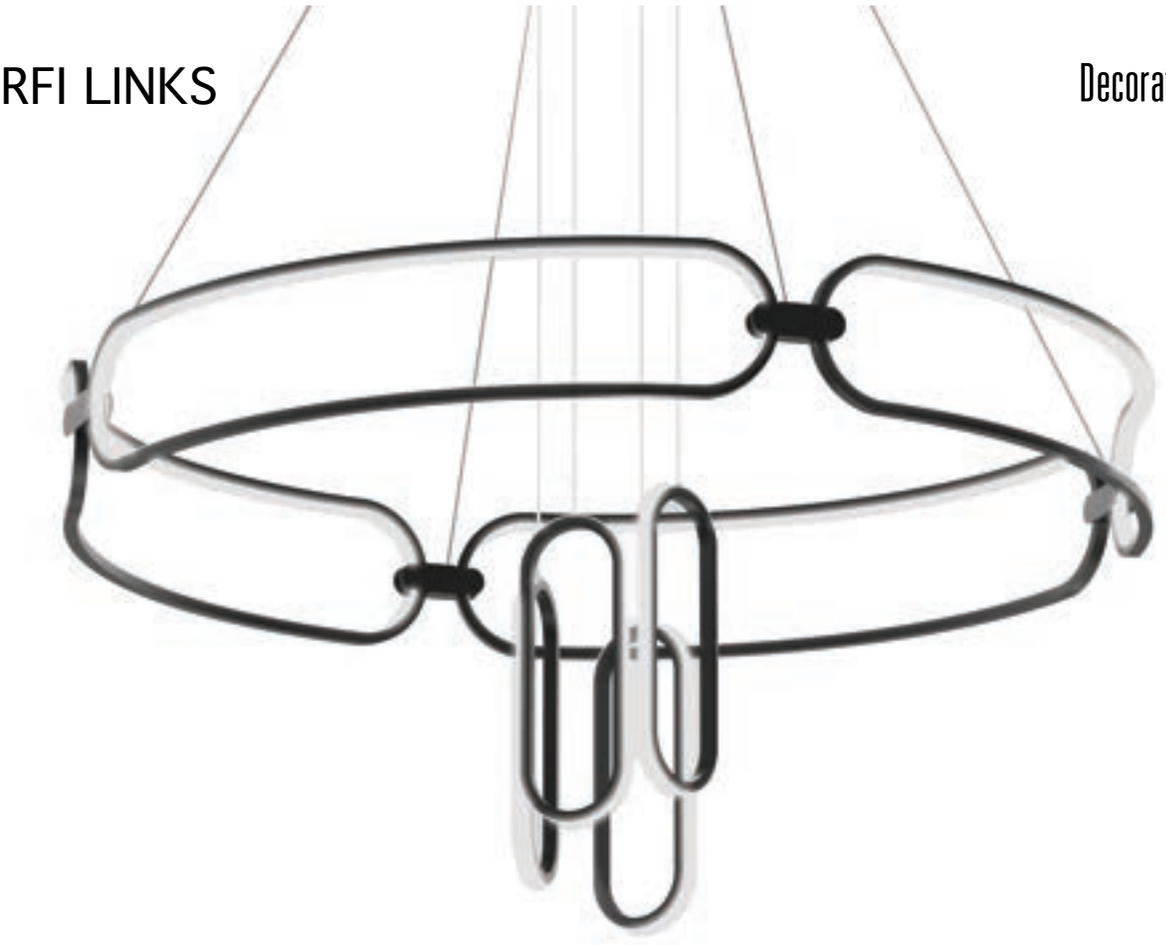

A luminaire with a contemporary design.
MORFI LINKS is a piece of architecture,
perfect for adding stature to an area.
With it's gentle lighting, it upgrades areas such as lobbies,
corridors, offices, stores and homes.

Technical Features

- Aluminium body, painted electrostatically in selected colour.
- High efficient polycarbonate satin cover.
- Connection for operation on 230V/50Hz.
- Power supply and suspensions 2m included

Upon Request

- At special dimensions.

CE | F | IP 40 | LED | 5 years WARRANTY | ta 25°C | Included

- Aluminium body, painted electrostatically in selected colour.
- Rosette, driver 24V DC and suspensions 2m included.
- CRI: min. 80 / SDCM: 3
- Luminous Efficacy:
  140Lm/W at 4000 K
  133Lm/W at 3000 K

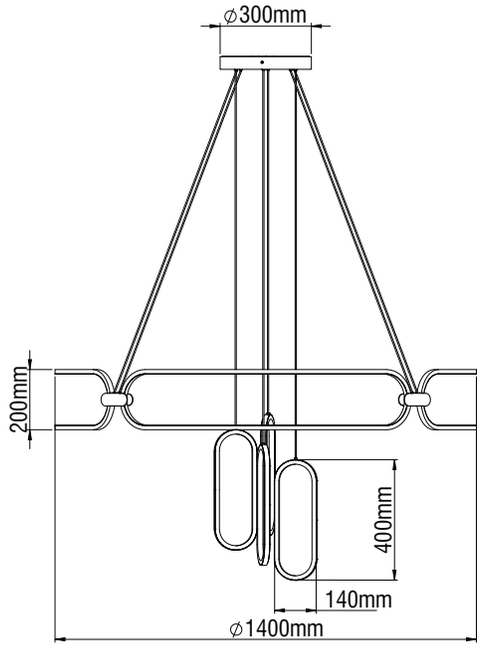

Code	Description
82007242■	Morfi Links 140W 24V DC Warm
82007243■	Morfi Links 140W 24V DC Neutral
82007252■	Morfi Links 140W 24V DC Warm Dimmer (Dali/Push Button)
82007253■	Morfi Links 140W 24V DC Neutral Dimmer (Dali/Push Button)
82007262■	Morfi Links 140W 24V DC Warm Dimmer (Phase Cut)
82007263■	Morfi Links 140W 24V DC Neutral Dimmer (Phase Cut)

Colour Codes:
0 Colours | 1 White | 2 Titan | 3 Black

NEON S

NEON S is a suspended luminaire with cylindrical shape.
It can be produced with different heights upon request.

Technical Features

- 360º light distribution.
- Pure light without IR/UV radiation.
- Efficient thermal management.
- Operation life: 50,000 hours with efficiency > 80% of the initial luminous flux (L80B10).

Upon request:
At different dimensions.

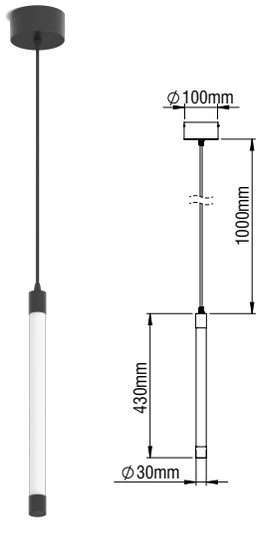

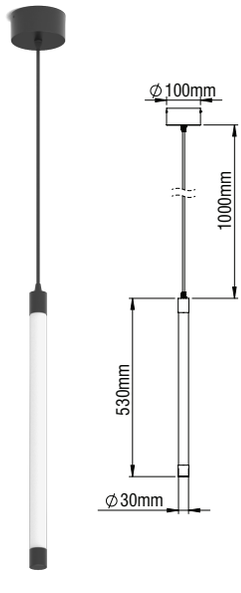

CE | F | IP 20 | LED | 850ºC | 5 years WARRANTY | ta 25ºC | Included

- Aluminium body, painted electrostatically in selected colour or plated.
- Aluminium rosette ø100mm.
- Rosette, driver and suspension 1m included.
- CRI: min. 80 / SDCM: 3
- Luminous Efficacy:
  96 Lm/Watt at 4000K
  92 Lm/Watt at 3000K

Code	Description
88841■■	NEON S 10W 43cm
88842■■	NEON S 12W 53cm

LED COLOUR CODES: 2 Warm 3 Neutral

Colour Codes: 0 Colours 1 White 2 Titan 3 Black 4 Chrome 5 matt Alum.

NEON R

NEON R is a recessed - suspended luminaire with cylindrical shape.
It can be produced with different heights upon request.

Technical Features

- 360º light distribution.
- Pure light without IR/UV radiation.
- Efficient thermal management.
- Operation life: 50,000 hours with efficiency > 80% of the initial luminous flux (L80B10).

Upon request:
At different dimensions.

CE | F | IP **20** | **LED** | **850**ºC | 5 years WARRANTY | ta 25ºC | not included

- For recessed installation.
- Aluminium body, painted electrostatically in selected colour or plated.
- Aluminium rosette ø100mm.
- Rosette and suspension 1m included.
- CRI: min. 80 / SDCM: 3
- Luminous Efficacy:
  96 Lm/Watt at 4000K
  92 Lm/Watt at 3000K

Code	Description
88843■■	NEON R 10W 43cm
88844■■	NEON R 12W 53cm

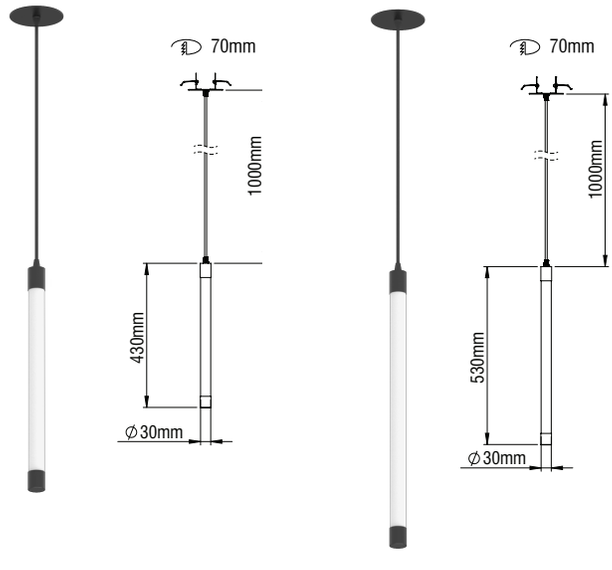

DRIVERS 24V DC

CODE	DESCRIPTION	IP	DIMENSIONS mm
800071	DRIVER LED 24V DC/30W	20	153x41x32
800099	DRIVER LED 24V DC/50W	20	99x82x30
800097	DRIVER LED 24V DC/60W	20	180x52x30
800105	DRIVER LED 24V DC/60W	20	225x43x29,8
800106	DRIVER LED 24V DC/100W	20	295x43x29,8

DIMMER DRIVERS 24V DC

CODE	DESCRIPTION	IP	DIMENSIONS mm	DIMMER
800139	DRIVER LED 24V DC/35W	20	195x43x30,2	DALI / PUSH BUTTON
800018	DRIVER LED 24V DC/60W	20	225x43x30,2	DALI / PUSH BUTTON
800017	DRIVER LED 24V DC/100W	20	295x43x30	DALI / PUSH BUTTON
800108	DRIVER LED 24V DC/150W	20	325x43x30,2	DALI / PUSH BUTTON
800101	DRIVER LED 24V DC/60W	20	195x48x30	PHASE CUT / 1-10V DC
800102	DRIVER LED 24V DC/100W	20	232x49x29	PHASE CUT / 1-10V DC

LED COLOUR CODES:
2 Warm 3 Neutral

Colour Codes:
0 Colours 1 White 2 Titan 3 Black 4 Chrome 5 matt Alum.

MIRACLE

MIRACLE is a suspended luminaire with cylindrical shape.
It can be produced with different heights upon request.

Technical Features

- Aluminium body with PMMA opal cover.
- Pure light without IR/UV radiation.
- Efficient thermal management.
- Operation life: 50,000 hours with efficiency > 80% of the initial luminous flux (L80B10).

Upon request:
Available with highest colour rendering index (CRI)

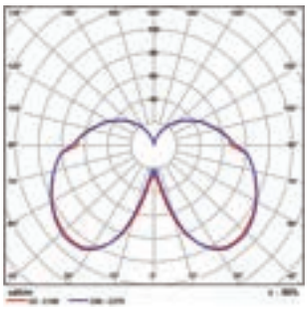

MIRACLE / MIRACLE AS

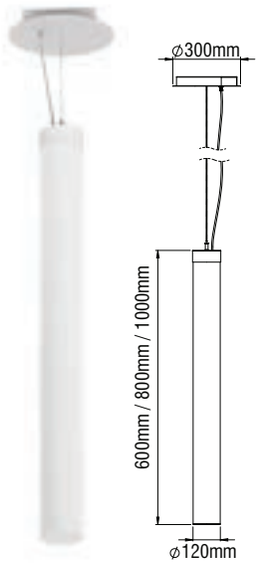

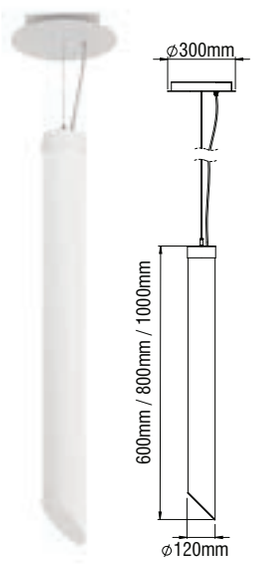

CE | F | IP 20 | LED | 850°C | 5 years WARRANTY | ta 25°C | Included

- Aluminium body, painted electrostatically in selected colour or plated.
- Aluminium rosette ⌀300mm.
- Rosette, driver and suspension 1m included.
- CRI: min. 80 / SDCM: 3
- Luminous Efficacy:
  140 Lm/Watt at 4000K
  133 Lm/Watt at 3000K

Code	Description
888401■■	MIRACLE Suspended 32W 60cm
888402■■	MIRACLE Suspended 44W 80cm
888403■■	MIRACLE Suspended 56W 100cm
888404■■	MIRACLE Suspended AS 32W 60cm
888405■■	MIRACLE Suspended AS 44W 80cm
888406■■	MIRACLE Suspended AS 56W 100cm

* For dimmer version add letter **"D"** at the end of product code.

LED COLOUR CODES:	Colour Codes:
2 Warm 3 Neutral	0 Colours 1 White 2 Titan 3 Black 4 Chrome 5 matt Alum.

EKALI S

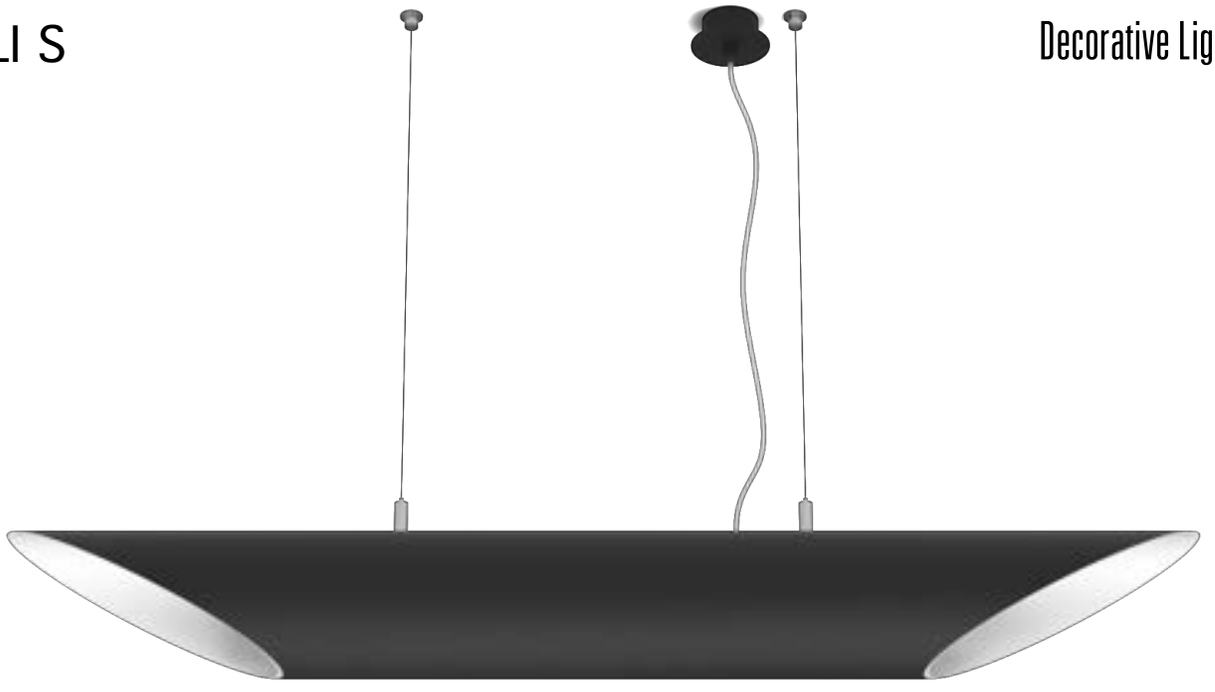

Technical Features

- Aluminium body.
- E27 lampholders.
- Semi transparet PMMA cover.
- Power supply and suspensions 2m included.

CE | F | IP **40** | **850**°C

- Aluminium body.
- Satin PMMA cover.
- 230V/50Hz.

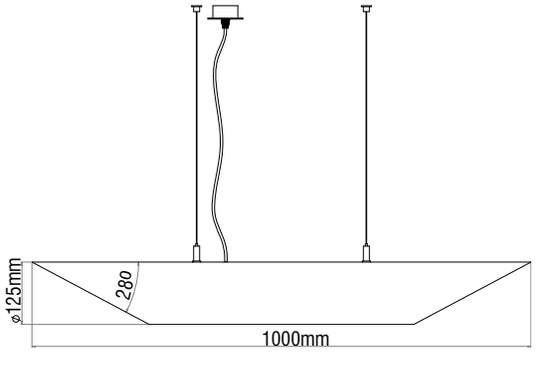

Code	Description	L
85876■	Ekali S Two Way E27 2x8W Warm *	1000
85877■	Ekali S Two Way E27 2x8W Neutral *	1000

* Led Lamps 8W/E27 included

Colour Codes:
0 Colours 1 White 2 Titan 3 Black

LAOURA

A luminaire with a contemporary design.
LAOURA is a piece of architecture, perfect for adding stature to an area.
With it's gentle lighting, it upgrades areas such as lobbies, corridors, offices, stores and homes.

Technical Features

- Aluminium body, painted electrostatically in selected colour.
- High efficient polycarbonate satin cover.
- Connection for operation on 230V/50Hz.

Upon Request

- At special dimensions.

IP **40** | LED | 5 years WARRANTY | ta 25°C | Included

- Aluminium body, painted electrostatically in selected colour.
- CRI: min. 80 / SDCM: 3
- Luminous Efficacy:
  140Lm/W at 4000 K
  133Lm/W at 3000 K

Code	Description
82007152■	Laoura 56W 24V DC Warm
82007153■	Laoura 56W 24V DC Neutral
82007162■	Laoura 56W 24V DC Warm Dimmer (Dali/Push Button)
82007163■	Laoura 56W 24V DC Neutral Dimmer (Dali/Push Button)
82007172■	Laoura 56W 24V DC Warm Dimmer (Phase Cut)
82007173■	Laoura 56W 24V DC Neutral Dimmer (Phase Cut)

Colour Codes:
0 Colours 1 White 2 Titan 3 Black

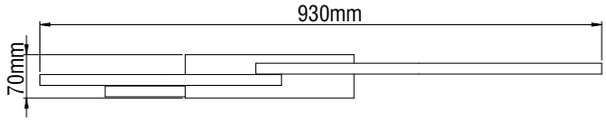

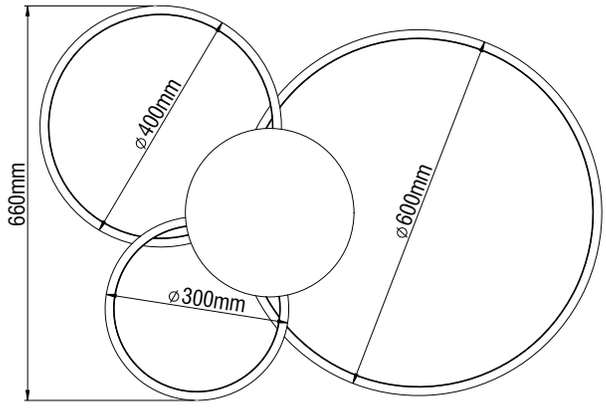

ARIA

A luminaire with a contemporary design.
ARIA is a piece of architecture, perfect for adding stature to an area.
With it's gentle lighting, it upgrades areas such as lobbies, corridors, offices, stores and homes.

Technical Features

- Aluminium body, painted electrostatically in selected colour.
- High efficient polycarbonate satin cover.
- Connection for operation on 230V/50Hz.

Upon Request

- At special dimensions.

CE | F | IP **40** | LED | years 5 WARRANTY | ta 25ºC | Included

- Aluminium body, painted electrostatically in selected colour.
- CRI: min. 80 / SDCM: 3
- Luminous Efficacy:
  140Lm/W at 4000 K
  133Lm/W at 3000 K

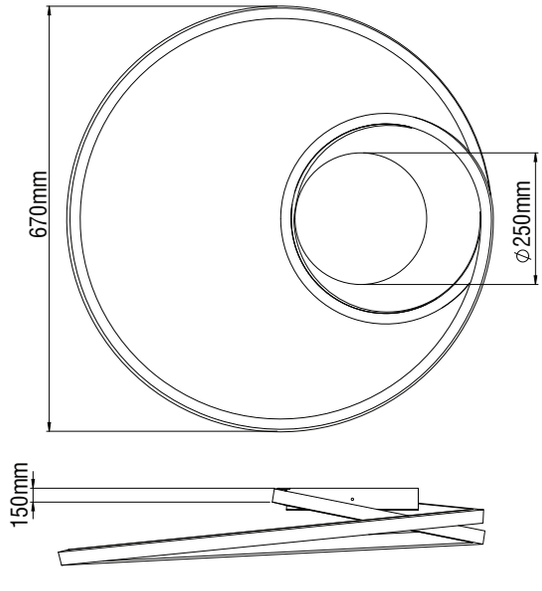

Code	Description
82007012■	Aria 50W 24V DC Warm
82007013■	Aria 50W 24V DC Neutral
82007022■	Aria 50W 24V DC Warm Dimmer (Dali/Push Button)
82007023■	Aria 50W 24V DC Neutral Dimmer (Dali/Push Button)
82007032■	Aria 50W 24V DC Warm Dimmer (Phase Cut)
82007033■	Aria 50W 24V DC Neutral Dimmer (Phase Cut)

Colour Codes:
0 Colours 1 White 2 Titan 3 Black

OLIA

A luminaire with a contemporary design.
OLIA is a piece of architecture, perfect for adding stature to an area.
With it's gentle lighting, it upgrades areas such as lobbies, corridors, offices, stores and homes.

Technical Features

- Aluminium body, painted electrostatically in selected colour.
- High efficient polycarbonate satin cover.
- Connection for operation on 230V/50Hz.

Upon Request

- At special dimensions.

OLIA

OLIA 1

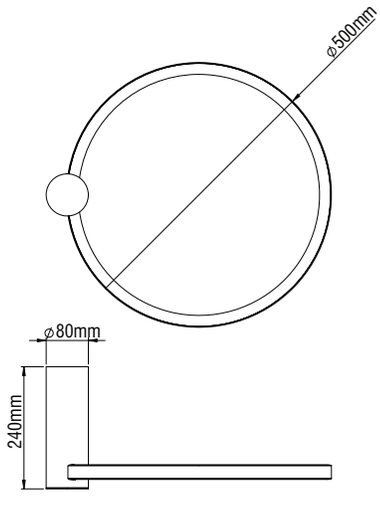

CE | F | IP 40 | LED | 850°C | 5 years WARRANTY | ta 25°C | Included

- Aluminium body, painted electrostatically in selected colour.
- Driver 24V DC included.
- CRI: min. 80 / SDCM: 3
- Luminous Efficacy:
  140Lm/W at 4000 K
  133Lm/W at 3000 K

Code	Description
8200718■■	Olia 1 24W 24V DC
8200719■■	Olia 1 24W 24V DC (dali / push button)
8200720■■	Olia 1 24W 24V DC (phase cut)

OLIA 2

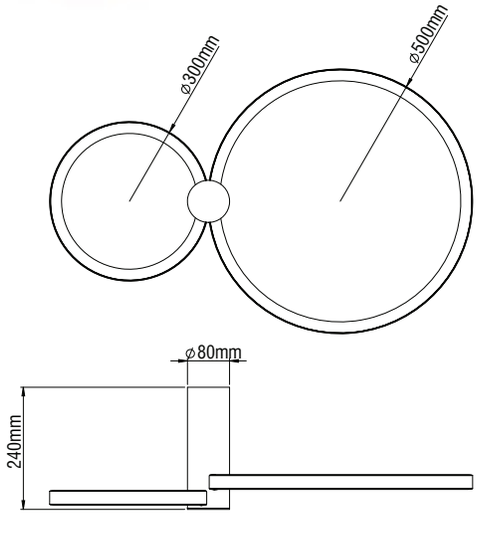

CE | F | IP 40 | LED | 850°C | 5 years WARRANTY | ta 25°C | Included

- Aluminium body, painted electrostatically in selected colour.
- Driver 24V DC included.
- CRI: min. 80 / SDCM: 3
- Luminous Efficacy:
  140Lm/W at 4000 K
  133Lm/W at 3000 K

Code	Description
8200721■■	Olia 2 36W 24V DC
8200722■■	Olia 2 36W 24V DC (dali / push button)
8200723■■	Olia 2 36W 24V DC (phase cut)

LED COLOUR CODES:	Colour Codes:
2 Warm 3 Neutral	0 Colours 1 White 2 Titan 3 Black

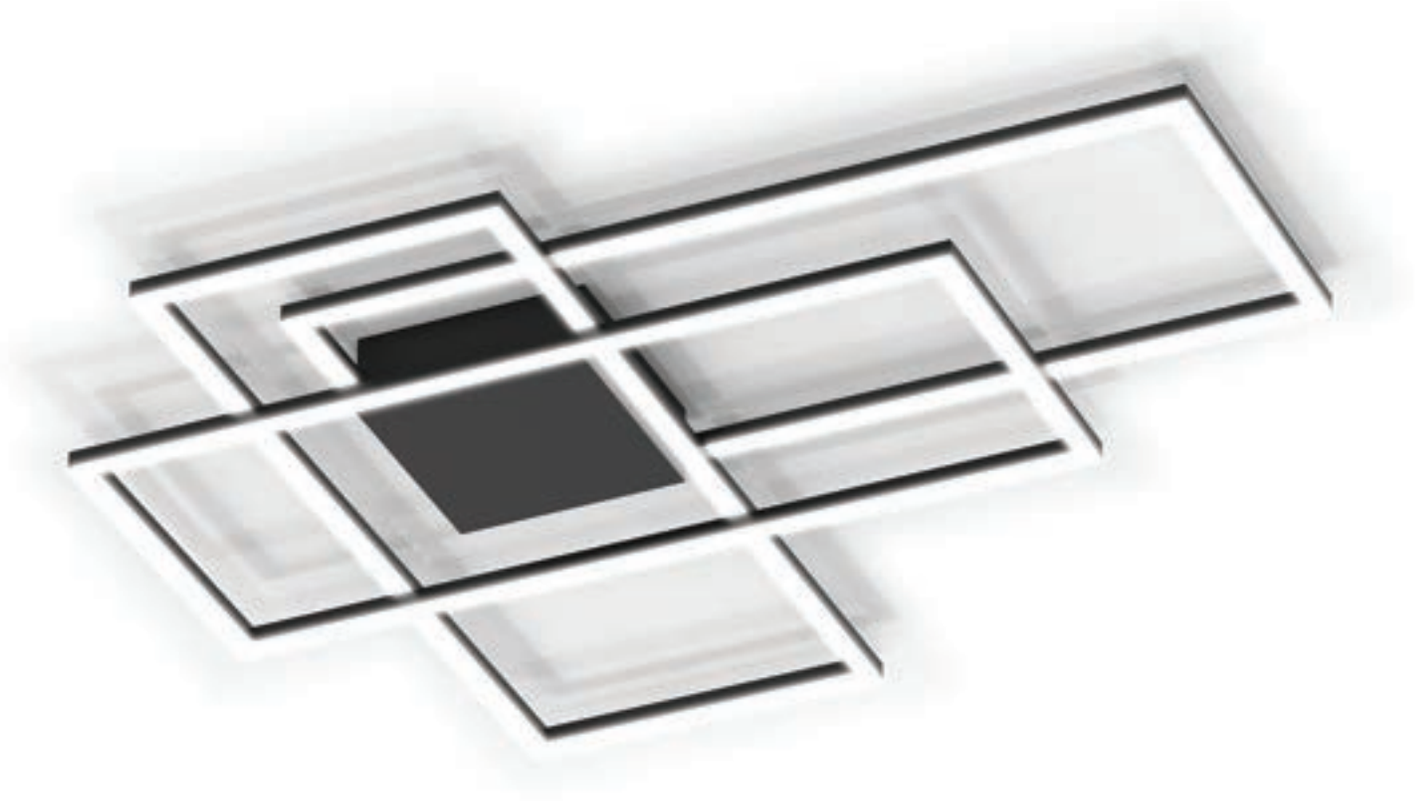

A luminaire with a contemporary design.
KALIA is a piece of architecture, perfect for adding stature to an area.
With it's gentle lighting, it upgrades areas such as lobbies, corridors, offices, stores and homes.

Technical Features

- Aluminium body, painted electrostatically in selected colour.
- Pure light without IR/UV radiation.
- Operation life: 50,000 hours with efficiency > 80% of the initial luminous flux (L80B10).
- Connection for operation on 230V/50Hz.

Upon Request

- At special shapes and dimensions.

KALIA

KALIA 1

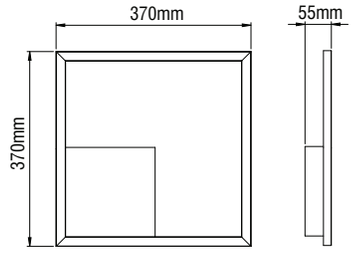

IP 40 | LED | 850°C | 5 years WARRANTY | ta 25°C | Included

- Aluminium body, painted electrostatically in selected colour.
- Driver 24V DC included.
- CRI: min. 80 / SDCM: 3
- Luminous Efficacy:
  140Lm/W at 4000 K
  133Lm/W at 3000 K

Code	Description
8200540■■	Kalia 1 21W 24V DC
8200544■■	Kalia 1 21W 24V DC (phase cut)
8200532■■	Kalia 1 21W 24V DC (dali / push button)

KALIA 2

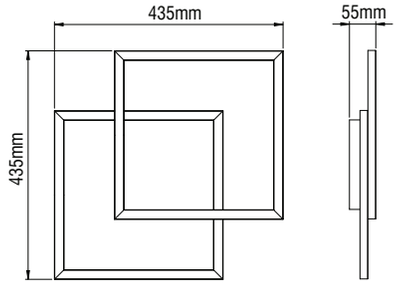

IP 40 | LED | 850°C | 5 years WARRANTY | ta 25°C | Included

- Aluminium body, painted electrostatically in selected colour.
- Driver 24V DC included.
- CRI: min. 80 / SDCM: 3
- Luminous Efficacy:
  140Lm/W at 4000 K
  133Lm/W at 3000 K

Code	Description
8200541■■	Kalia 2 36W 24V DC
8200545■■	Kalia 2 36W 24V DC (phase cut)
8200533■■	Kalia 2 36W 24V DC (dali / push button)

LED COLOUR CODES: 2 Warm 3 Neutral

Colour Codes: 0 Colours 1 White 2 Titan 3 Black

KALIA 3

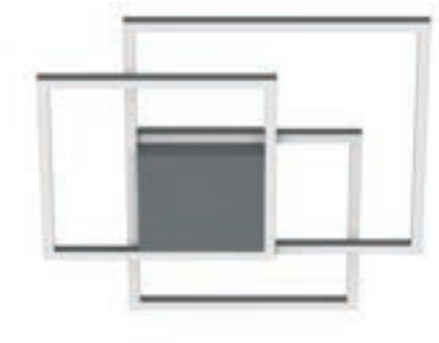

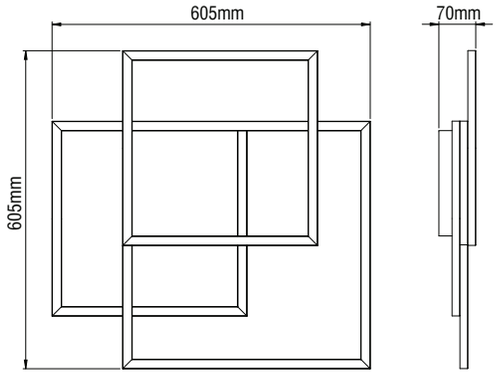

IP 40 | LED | 850°C | 5 years WARRANTY | ta 25°C | Included

- Aluminium body, painted electrostatically in selected colour.
- Driver 24V DC included.
- CRI: min. 80 / SDCM: 3
- Luminous Efficacy:
  140Lm/W at 4000 K
  133Lm/W at 3000 K

Code	Description
8200542■■	Kalia 3 69W 24V DC
8200546■■	Kalia 3 69W 24V DC (phase cut)
8200547■■	Kalia 3 69W 24V DC (dali / push button)

KALIA 4

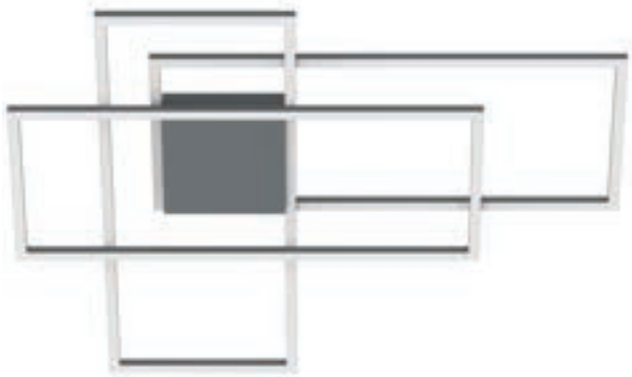

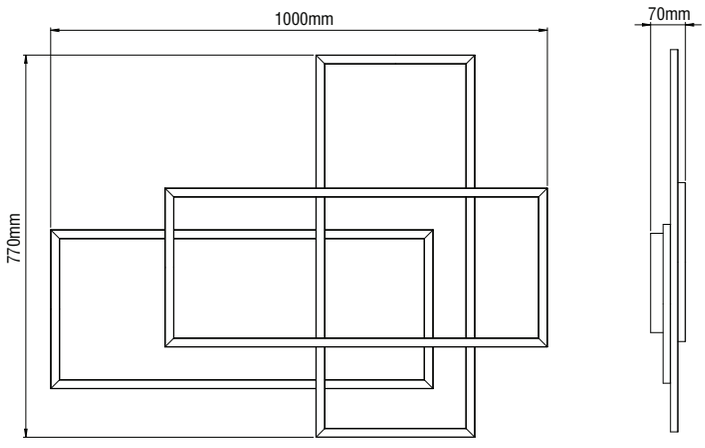

IP 40 | LED | 850°C | 5 years WARRANTY | ta 25°C | Included

- Aluminium body, painted electrostatically in selected colour.
- Driver 24V DC included.
- CRI: min. 80 / SDCM: 3
- Luminous Efficacy:
  140Lm/W at 4000 K
  133Lm/W at 3000 K

Code	Description
8200543■■	Kalia 4 95W 24V DC
8200548■■	Kalia 4 95W 24V DC (phase cut)
8200549■■	Kalia 4 95W 24V DC (dali / push button)

LED COLOUR CODES:	Colour Codes:
2 Warm 3 Neutral	0 Colours 1 White 2 Titan 3 Black

LOUPE TABLE

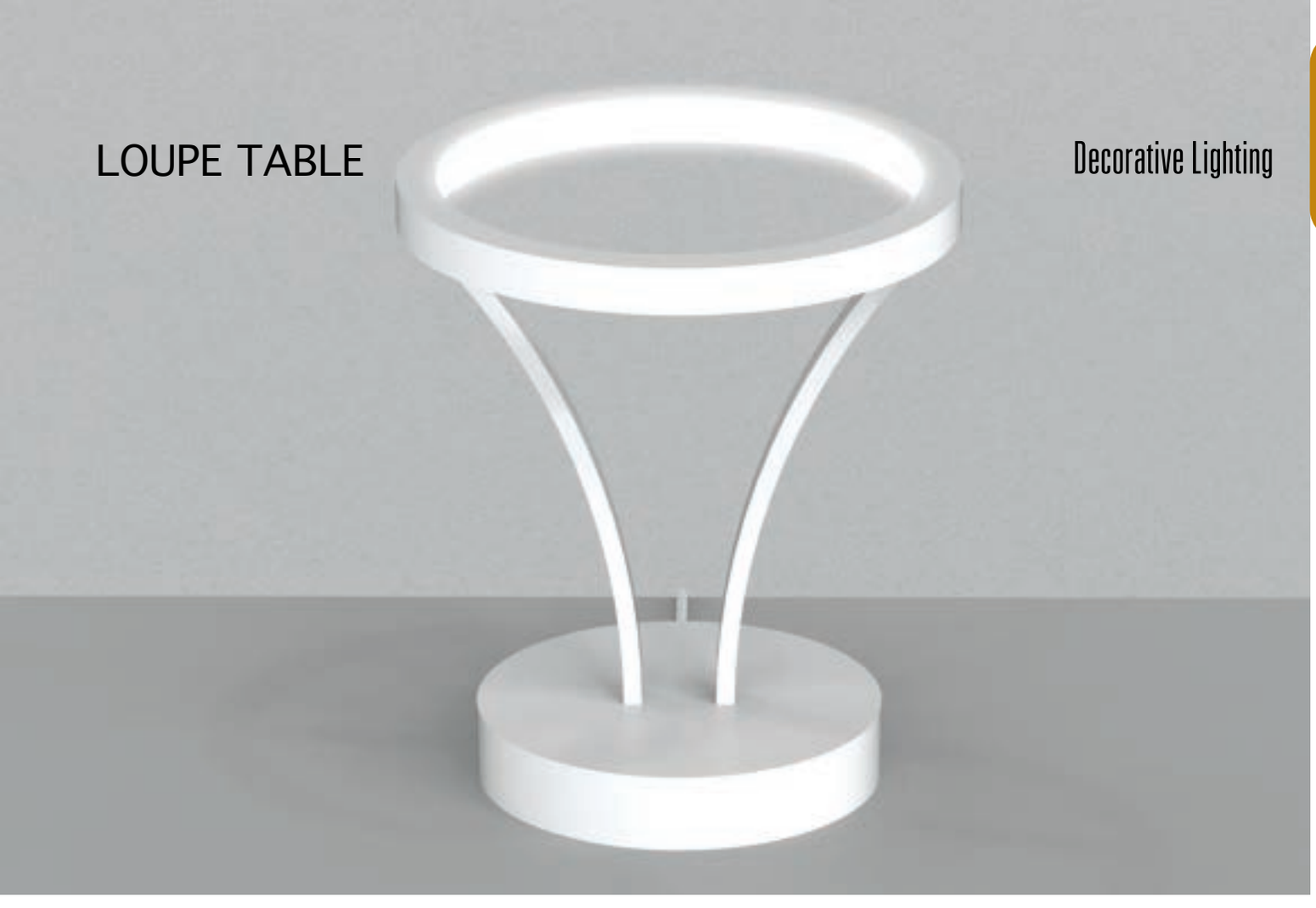

Technical Features

- Aluminium body, painted electrostatically in selected colour.
- High efficient polycarbonate satin cover.
- Connection for operation on 230V/50Hz.

IP 40 | LED | 5 years WARRANTY | ta 25ºC | Included

- Aluminium body, painted electrostatically in selected colour.
- Power cable 1,5m included.
- Rosette and driver 24V DC included.
- CRI: min. 80 / SDCM: 3
- Luminous Efficacy:
  140Lm/W at 4000 K
  133Lm/W at 3000 K

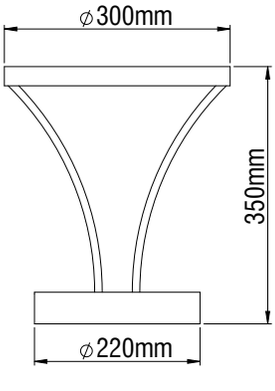

Code	Description
85952■	Loupe Table 15W 24V DC Warm
85953■	Loupe Table 15W 24V DC Neutral

Colour Codes:
0 Colours | 1 White | 2 Titan | 3 Black

MORFI FLOOR

MORFI FLOOR is not just a customised product with an innovative design, but also a working tool for the lighting designers and engineers.
It combines the aesthetic with the latest LED technological standards and meets the various needs of the customers in a bespoke way: it allows them to "think big" offering totally unexpected results even to large scale projects.

Technical Features

- Aluminium body, painted electrostatically in selected colour.
- High efficient polycarbonate satin cover.
- Direct / Indirect illumination.
- Pure light without IR/UV radiation.
- Operation life: 50,000 hours with efficiency > 80% of the initial luminous flux (L80B10).
- Connection for operation on 230V/50Hz.

Upon Request

- At special dimensions.

MORFI FLOOR

MORFI IN FLOOR 1

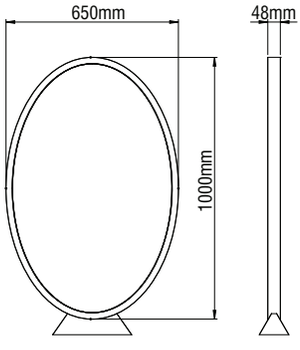

MORFI IN FLOOR 2

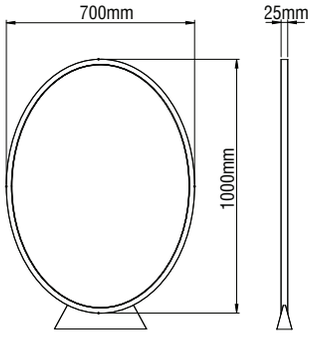

MORFI IN FLOOR 3

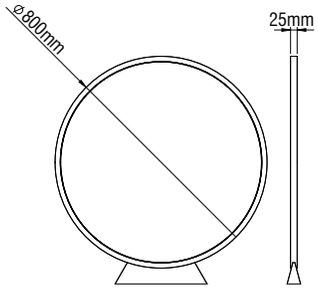

IP 40 | LED | 5 years WARRANTY | ta 25ºC | Included

- Aluminium body, painted electrostatically in selected colour.
- Power cable 1,5m included.
- CRI: min. 80 / SDCM: 3
- Luminous Efficacy:
  140Lm/W at 4000 K
  133Lm/W at 3000 K

Code	Description
8200571■■	Morfi Floor 1 80W 24V DC
8200572■■	Morfi Floor 2 40W 24V DC
8200573■■	Morfi Floor 3 40W 24V DC

LED COLOUR CODES: 2 Warm 3 Neutral

Colour Codes: 0 Colours 1 White 2 Titan 3 Black

BELLITO

A contemporary design full of captivating and dynamic character.
Available in a wide range of colours, BELLITO is an ideal luminaire for a kitchen island or above the tables in a bar.

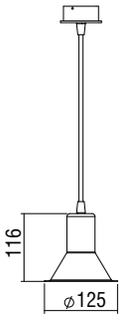

IP 20

PAR 16 LED
GU10

- Aluminium body, painted in selected colour or plated.
- Version for GU10, GU10 LED.
- 1m suspension cable, adjustable.
- Flat finish.
- Aluminium rosette ø70mm.

Code	Description	Kg
87501■	Bellito GU10	0,220

Colour Codes:
0 Colours 1 White 2 Titan 3 Black 4 Chrome

URANIA

Technical Features

- Aluminium reflector, painted in selected colour or plated.
- Suspension with 2m textile cord 3x0,75mm^2.

Upon request

- Textile cord in white or red colour.

Suggested Lamps Solutions

Urania ø300: CFL GLOBE 7W, 286Lm, in 2700 K or 4000 K.

Urania ø400: CFL TUBE 11W, 600Lm, in 2700 K or 4000 K.

Urania ø500: CFL GLOBE 23W, 1371Lm, in 2700 K or 4000 K.

For LED Version

- Pure light without IR/UV radiation.
- Efficient thermal management.
- Operation life: 50,000 hours with efficiency > 80% of the initial luminous flux (L80B10).
- Connection for operation on 230V/50Hz.

FOR LED VERSION

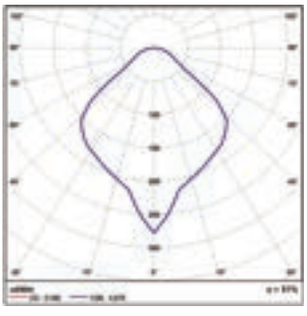

URANIA

URANIA ø300

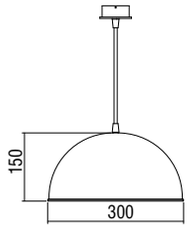

CE | F | IP 20 | CFL TUBE E27

- Version for CFL/E27.
- 2m suspension cable, adjustable.
- Flat finish.
- Aluminium rosette ø70mm.

Code	Description	Kg
87609■	Urania Suspension	0,230
80740■	Urania Reflector ø300	0,610

URANIA ø400

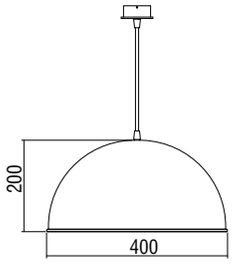

CE | F | IP 20 | CFL TUBE E27

- Version for CFL/E27.
- 2m suspension cable, adjustable.
- Flat finish.
- Aluminium rosette ø70mm.

Code	Description	Kg
87609■	Urania Suspension	0,230
80739■	Urania Reflector ø400	0,710

URANIA ø500

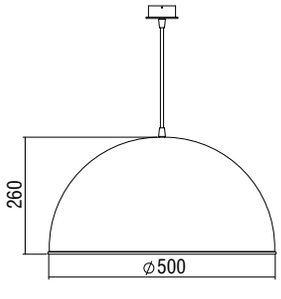

CE | F | IP 20 | CFL TUBE E27 | CFL GLOBE E27

- Version for CFL/E27.
- 2m suspension cable, adjustable.
- Flat finish.
- Aluminium rosette ø70mm.

Code	Description	Kg
87609■	Urania Suspension	0,230
80738■	Urania Reflector ø500	1,140

Colour Codes:
0 Colours | 1 White | 2 Titan | 3 Black | 4 Chrome* | 8 Metallic

* Only for suspension

URANIA

URANIA ⌀300 20W LED

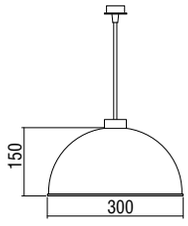

CE | F | IP 20 | LED | 5 years WARRANTY | ta 25ºC

- 2m suspension cable, adjustable.
- Flat finish.
- Aluminium rosette ⌀100mm.
- Dimmer Phase Cut.
- CRI: min. 80 / SDCM: 3
- Luminous Efficacy:
  20W: 4000 K: 95 Lm/Watt
  20W: 3000 K: 90 Lm/Watt

Code	Description	Kg
87612■	Urania Suspension	0,200
80746■	Urania Reflector ⌀300 Warm	0,800
80747■	Urania Reflector ⌀300 Neutral	0,800

URANIA ⌀400 30W LED

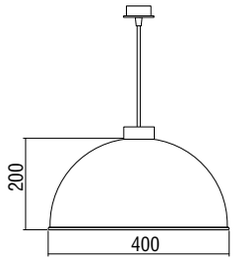

CE | F | IP 20 | LED | 5 years WARRANTY | ta 25ºC

- 2m suspension cable, adjustable.
- Flat finish.
- Aluminium rosette ⌀100mm.
- Dimmer Phase Cut.
- CRI: min. 80 / SDCM: 3
- Luminous Efficacy:
  30W: 4000 K: 95 Lm/Watt
  30W: 3000 K: 90 Lm/Watt

Code	Description	Kg
87612■	Urania Suspension	0,200
80748■	Urania Reflector ⌀400 Warm	0,900
80749■	Urania Reflector ⌀400 Neutral	0,900

URANIA ⌀500 40W LED

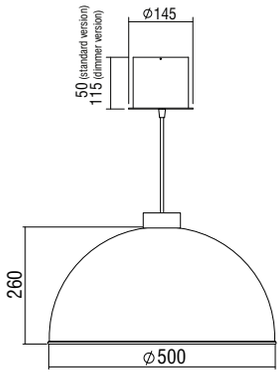

CE | F | IP 20 | LED | 5 years WARRANTY | ta 25ºC | Included

- 2m suspension cable, adjustable.
- Flat finish.
- Driver placed in rozette.
- 40W power consumption driven at 1050mA.
- CRI: min. 80 / SDCM: 3
- Luminous Efficacy:
  40W: 4000 K: 141 Lm/Watt
  40W: 3000 K: 136 Lm/Watt

Code	Description	Kg
87613■ *	Urania Suspension 40W Led	0,400
80750■	Urania Reflector ⌀500 Warm	1,330
80751■	Urania Reflector ⌀500 Neutral	1,330

* For dimmer version add letter "**D**" at the end of product code.

Colour Codes:
0 Colours | 1 White | 2 Titan | 3 Black | 4 Chrome* | 8 Metallic

* Only for suspension

KLIO

A luminaire with a special curved shape and small dimensions. The perfect choice for spaces that need a luminaire charged with elegance and charisma.

Technical Features

- Aluminium reflector, painted in selected colour or plated.
- Canopy in white colour.
- Suspension with 2m textile cord 3x0,75mm^2.

Upon request

- Textile cord in red colour.

Suggested Lamps Solutions

Klio ø180: CFL TUBE 20W, 1151Lm, in 2700 K or 4000 K.

Klio ø245: CFL TUBE 20W, 1151Lm, in 2700 K or 4000 K.

KLIO

KLIO ø180

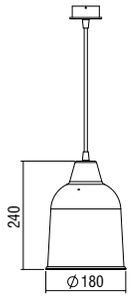

IP 20 | CFL TUBE E27

- Version for CFL/E27.
- 2m suspension cable, adjustable.
- Flat finish.
- Aluminium rosette ø70mm.

Code	Description	Kg
87609■	Klio Suspension	0,230
80736■	Klio Reflector ø180	0,220

KLIO ø245

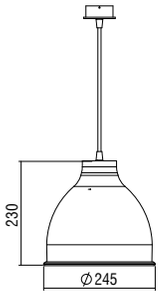

IP 20 | CFL TUBE E27

- Version for CFL/E27.
- 2m suspension cable, adjustable.
- Flat finish.
- Aluminium rosette ø70mm.

Code	Description	Kg
87609■	Klio Suspension	0,230
80737■	Klio Reflector ø240	0,320

Colour Codes:
0 Colours | 1 White | 2 Titan | 3 Black | 4 Chrome | 8 Metallic

ARMONIA

This luminaire has an imposing scale and an industrial, minimal design. Perfect when hunged in a room that needs a touch of personality and a strong architectural identity.

Technical Features

- Aluminium body, painted in selected colour.
- Aluminium or prismatic reflector selection.
- Canopy in white colour (for aluminium reflector).
- Suspension with 1m cord 3x0,75mm^2.
- Pure light without IR/UV radiation.
- Glass lens with wide light distribution.
- Efficient thermal management.
- 2000 or 3000 lumen package selection.
- Operation life: 50,000 hours with efficiency > 80% of the initial luminous flux (L80B10).
- Connection for operation in 230V/50Hz.

Upon request

- Textile cord in white or red colour.

ARMONIA

ARMONIA BODY

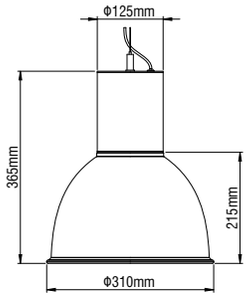

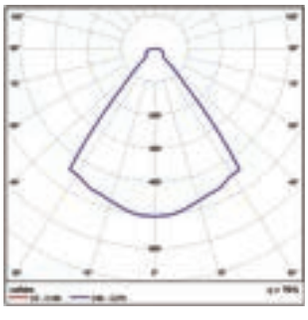

CE | F | IP 20 | LED | 5 years WARRANTY | ta 25°C

- 1m suspension cable, adjustable.
- Flat finish.
- Aluminium rosette ø70mm.
- Glass lens with wide light distribution.
- Dimmer Phase Cut.
- CRI: min. 80 / SDCM: 3
- Luminous Efficacy:
  20W: 4000 K: 95 Lm/Watt
  20W: 3000 K: 90 Lm/Watt
  30W: 4000 K: 95 Lm/Watt
  30W: 3000 K: 90 Lm/Watt

Code	Description	Kg
87701■	ARMONIA Body 20W LED Warm	1,500
87702■	ARMONIA Body 20W LED Neutral	1,500
87703■	ARMONIA Body 30W LED Warm	1,500
87704■	ARMONIA Body 30W LED Neutral	1,500

ARMONIA ALUMINIUM REFLECTOR

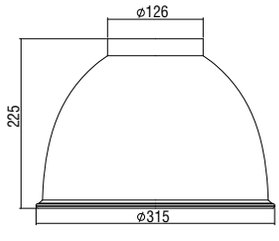

CE | F

- Version for LED CHIP.

Code	Description	Kg
80745■	Armonia Reflector ø315	0,420

ARMONIA PRISMATIC REFLECTOR

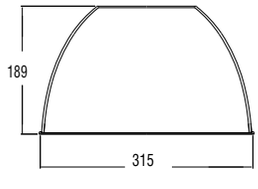

CE | F

- Version for LED CHIP.

Code	Description	Kg
807303	Armonia Plastic Reflector ø315	0,410

Colour Codes:
0 Colours | 1 White | 2 Titan | 3 Black

THALIA

A special geometrical structure with an elegant sense of style. Available in four different versions so as to adapt to any setting.

Technical Features

- Aluminium reflector, painted in selected colour or plated.
- Canopy in white colour.
- Suspension with 2m textile cord 3x0,75mm^2.
  and flat or hook finish, painted in selected colour or plated.

Upon request

- Textile cord in red colour.

Suggested Lamps Solutions

Thalia ø315 Flat - Hook:	CFL TUBE 20W, 1151Lm, in 2700 K or 4000 K.
Thalia ø435 Flat - Hook:	CFL TUBE 23W, 1371Lm, in 2700 K or 4000 K. CFL GLOBE 23W, 1371Lm, in 2700 K or 4000 K.

THALIA

THALIA ø315 Flat

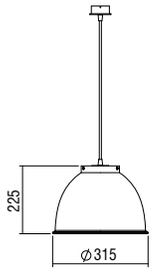

IP 20 | CFL TUBE E27

- Version for CFL/E27.
- 2m suspension cable, adjustable.
- Flat finish.
- Aluminium rosette ø70mm.

Code	Description	Kg
87601■	Thalia Suspension Flat ø315	0,260
80732■	Thalia Reflector ø315	0,420

THALIA ø315 Hook

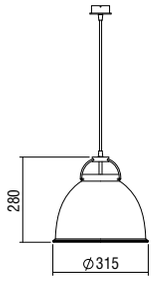

IP 20 | CFL TUBE E27

- Version for CFL/E27.
- 2m suspension cable, adjustable.
- Hook finish.
- Aluminium rosette ø70mm.

Code	Description	Kg
87602■	Thalia Suspension Hook ø315	0,300
80732■	Thalia Reflector ø315	0,420

THALIA ø435 Flat

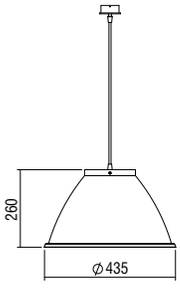

IP 20 | CFL TUBE E27 | CFL GLOBE E27

- Version for CFL/E27.
- 2m suspension cable, adjustable.
- Flat finish.
- Aluminium rosette ø70mm.

Code	Description	Kg
87603■	Thalia Suspension Flat ø435	0,260
80733■	Thalia Reflector ø435	0,590

THALIA ø435 Hook

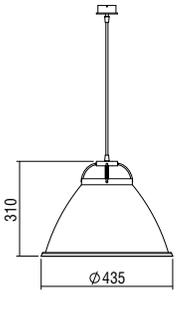

IP 20 | CFL TUBE E27 | CFL GLOBE E27

- Version for CFL/E27.
- 2m suspension cable, adjustable.
- Hook finish.
- Aluminium rosette ø70mm.

Code	Description	Kg
87604■	Thalia Suspension Hook ø435	0,300
80733■	Thalia Reflector ø435	0,590

Colour Codes:
0 Colours | 1 White | 2 Titan | 3 Black | 4 Chrome* | 8 Metallic

* Only for suspension

ROXANI

Behind its classic appearance, this luminaire hides a modern soul. Its symmetrical structure works well in both classical and contemporary environments.

Technical Features

- Aluminium reflector, painted in selected colour or plated.
- Canopy in white colour.
- Suspension with 2m textile cord 3x0,75mm^2.

Upon request

- Textile cord in red colour.

Suggested Lamps Solutions

Roxani ø400: CFL GLOBE 23W, 1371Lm, in 2700 K or 4000 K.

ROXANI

ROXANI ø400

IP 20

GFL GLOBE E27

- Version for CFL/E27.
- 2m suspension cable, adjustable.
- Flat finish.
- Aluminium rosette ø70mm.

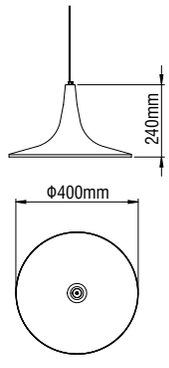

Code	Description	Kg
87611	Roxani Suspension	0,230
80744	Roxani Reflector ø400	0,610

Colour Codes:
0 Colours 1 White 2 Titan 3 Black 6 Copper 7 Bronze 8 Metallic

FILIRA

A luminaire with a special curved shape and small dimensions. The perfect choice for spaces that need a luminaire charged with elegance and charisma.
Available in two sizes to suit both domestic and more commercial applications.

Technical Features

- Aluminium reflector, painted in selected colour or plated.
- Canopy in white colour.
- Suspension with 2m textile cord 3x0,75mm^2.

Upon request

- Textile cord in red colour.

Suggested Lamps Solutions

Filira ø250: CFL TUBE 20W, 1151Lm, in 2700 K or 4000 K.
Filira ø350: CFL TUBE 20W, 1151Lm, in 2700 K or 4000 K.

FILIRA

FILIRA ø250

IP 20 | CFL TUBE E27

- Version for CFL/E27.
- 2m suspension cable, adjustable.
- Flat finish.
- Aluminium rosette ø70mm.

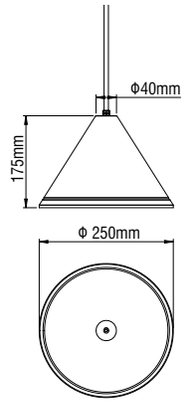

Code	Description	Kg
87609	Filira Suspension	0,230
80742	Filira Reflector ø250	0,610

FILIRA ø350

IP 20 | CFL TUBE E27

- Version for CFL/E27.
- 2m suspension cable, adjustable.
- Flat finish.
- Aluminium rosette ø70mm.

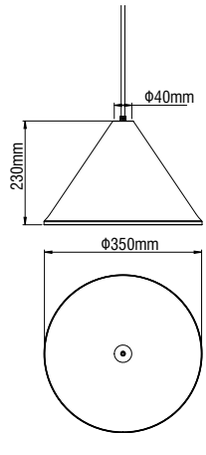

Code	Description	Kg
87609	Filira Suspension	0,230
80743	Filira Reflector ø350	0,610

Colour Codes:
0 Colours | 1 White | 2 Titan | 3 Black | 6 Copper | 7 Bronze | 8 Metallic

CUPOLA

This luminaire has an imposing scale and an industrial, minimal design. Perfect when hunged in a room that needs a touch of personality and a strong architectural identity.

Technical Features

- Aluminium body, painted in selected colour.
- Aluminium or prismatic reflector selection.
- Canopy in white colour (for aluminium reflector).
- Suspension with 1m cord 3x0,75mm^2.

Upon request

- Textile cord in white or red colour.

For LED Version

- Pure light without IR/UV radiation.
- Aluminum heatsink.
- Glass lens with wide light distribution.
- Efficient thermal management.
- Operation life: 50,000 hours with efficiency > 80% of the initial luminous flux (L80B10).
- Connection for operation in 230V/50Hz.

CUPOLA

CUPOLA PICCOLA BODY E27

IP **20** | CFL TUBE E27

- Version for E27.
- 1m suspension cable, adjustable.
- Flat finish.
- Aluminium rosette ø70mm.

Code	Description	Kg
87301■	CUPOLA PICCOLA 1x max.100W/E27	0,340

CUPOLA PICCOLA BODY G12

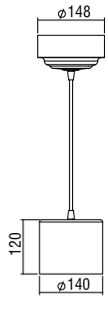

IP **20** | HQI G12

- Version for G12.
- 1m suspension cable, adjustable.
- Flat finish.
- Aluminium rosette ø148mm.

Code	Description	Kg
87302■	CUPOLA PICCOLA 1x 35W/G12	0,680

CUPOLA PICCOLA ALUMINIUM REFLECTOR

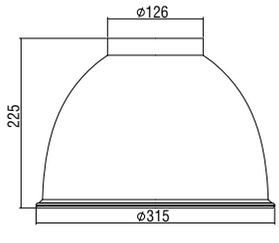

- Version for E27, G12.

Code	Description	Kg
80732■	Cupola Reflector ø315	0,420

CUPOLA PICCOLA PRISMATIC REFLECTOR

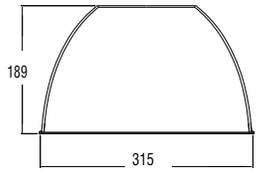

- Version for E27, G12.

Code	Description	Kg
807301	Cupola Reflector ø315	0,410

Colour Codes:
0 Colours | 1 White | 2 Titan | 3 Black | 9 Anodized

CUPOLA

CUPOLA GRANDE BODY

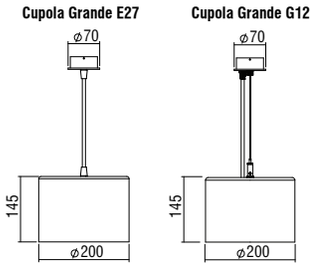

- Version for E27, G12.
- 1m suspension cable, adjustable.
- Flat finish.
- Aluminium rosette ⌀70mm.

Code	Description	Kg
87303■	CUPOLA GRANDE 1x max.250W/E27	0,800
87304■	CUPOLA GRANDE 1x 70W/HIT-TC-CE/G12	1,900
87305■	CUPOLA GRANDE 1x 150W/HIT-TC-CE/G12	2,460

CUPOLA GRANDE LED BODY

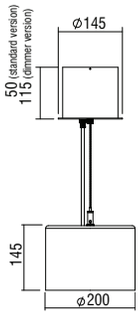

- Version for LED.
- 1m max. suspension cable, adjustable.
- Flat finish.
- Aluminium rosette ⌀145mm.
- 50W power consumption driven at 925mA.
- CRI: min. 80 / SDCM: 3
- Luminous Efficacy:
  50W: 4000 K: 160 Lm/Watt
  50W: 3000 K: 156 Lm/Watt

Code	Description	Kg
87309■	CUPOLA GRANDE 1x50W LED Warm	1,300
87310■	CUPOLA GRANDE 1x50W LED Neutral	1,300

* For dimmer version add letter **"D"** at the end of product code.

CUPOLA

CUPOLA GRANDE ALUMINIUM REFLECTOR

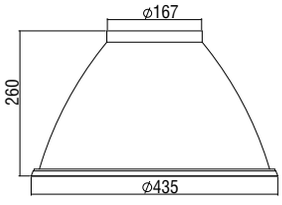

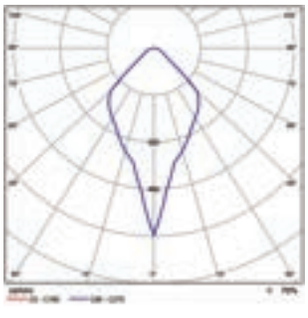

- Version for E27, G12, LED.

Code	Description	Kg
80733■	Cupola Reflector ø435	0,590

CUPOLA GRANDE PRISMATIC REFLECTOR

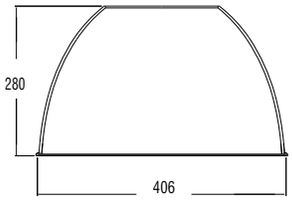

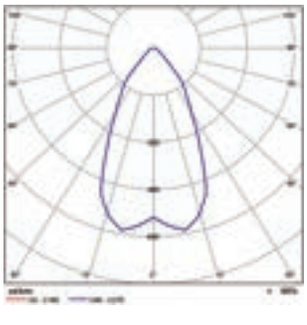

- Version for E27, G12, LED.

Code	Description	Kg
807302	Cupola Reflector ø406	0,580

Colour Codes:
0 Colours 1 White 2 Titan 3 Black 9 Anodized

CUPOLA

COMLED

www.comled.com.au